LAVOR

SIMPLY STRONGER

2026|27

MAIN CATALOGUE
PROFESSIONAL

EN

lavor.com

LAVOR

SIMPLY STRONGER

More strength, more power, more innovation.
This is what, day after day, forges the new Lavor brand and that is realized in our products, ambassadors of our philosophy through cutting-edge technical and quality features.
Why do we do it?
We want to be by your side ever more.
Simply

www.lavor.com

LAVORWASH

Pegognaga (MN)

Gran Bretagna

Francia

Lavorwash is worldwide leader in cleaning industry since 1975 and offers a wide and complete range of cleaning machinery suitable for any kind of applications, both indoor and outdoor relying on a fortyfour-year experience.
Over the years, Lavorwash has grown to become a specialist manufacturer of professional and household cleaning systems, acquiring
various leading brands and diversifying its own range to offer innovative products of excellence.

Lavorwash has production plants in Italy and around the world and nowadays it employs over 300 staff and has around 200 associates, with branches in several countries around the world such as France, the United Kingdom, Spain,
Poland, Brazil and China.

Lavorwash is a company with a consolidated reputation at national and international levels. It operates locally through branches located
around the world, delivering its products through importers, distributors, agent network and direct relations with large retailing chains

WATCH THE VIDEO

Cold water high-pressure cleaners page 8

Cold water high-pressure cleaners with combustion engine page 58

Hot water high-pressure cleaners page 88

Hot water high-pressure cleaners with combustion engine page 120

High-pressure pump units - Boilers page 136

Dry vacuum cleaners page 146

Wet & dry vacuum cleaners M Class page 156

Wet & dry vacuum cleaners Commercial Line page 158

Wet & dry vacuum cleaners Heavy Duty Line page 184

Industrial vacuum cleaners
page 198

Carpet cleaner - Spray extraction units
page 206

Single disc machines
page 220

Walk-behind floor scrubber driers
Ride-on floor scrubber driers
page 228

Ride-on floor scrubber driers with sweeping system
page 279

Walk-behind sweepers
Ride-on sweepers
page 284

Dry steam cleaners
Steam vacuum cleaners
page 320

Chemicals & sprayers
page 348

Efficiency, reliability, safety and ease of use are the basic factors for a careful selection of a professional product. On the ground of these standards, Lavor has conceived professional line high-pressure cleaners, in order to match, through high-tech products, perfect hygiene and clean with time/labour saving.

Being Manufacturers: from experience to knowledge

In the high-pressure cleaners market companies are divided in those who buy components to assemble products and manufacturers, who have a continuous R&D on all product components.
Lavorwash manufactures all the high-pressure cleaners components entirely and this allows: to spread product knowledge, culture and experience inside the company; to check the entire manufacturing cycle; to adopt possible improvements immediately; better sensitivity to market request adjusting product range design in real time.

What high pressure cleaner? Is it better pressure or delivery rate?

The right criteria to define the high-pressure cleaner performances is the washing effectiveness.
The elements that influence this value are: delivery rate (water volume processed by the pump in a unity of time) and pressure (l/h water power on a surface). The higher the delivery rate, the faster the washing phase (less rinsing time); the higher the pressure, the deeper the washing (better dirt degreasing).
It is often emphasized the pressure only (also because the pump size and the consequent manufacturing cost are cheaper), but delivery rate is as important as pressure.

What pump? Is it better a linear (crankshaft) or an axial one?

It does not exist a winning technology, because both solution can provide same performances and lifetime. What determines the pump quality is the quality of the project itself (linear or axial) and of the components used; for this reason Lavorwash decided to develop both technologies, taking into consideration a design that grants margin of safety and reliability.

• Linear pump
The movement of the (3) pistons occurs through a system of connecting rods and crankshaft. The longitudinal axle of the pistons (placed at the same level or linear) is perpendicular to the motor rotation axle. It is more versatile to bear high delivery rates (from 21 l/min) and it has a better self priming.

• Water cooled motor
Water flows through the Stainless steel coil around the motor, this allows a better thermal exchange (and so a cooling) than air also in those countries where inlet water could reaches 60°C. This allows a drop in operating temperature of the motor and pump mechanical elements, granting a better reliability and longer life.

• Thermal valve
When the gun trigger is released, the same water flows through the pump (by-pass) and it overheats and sooner or later this damages the valve seals. With this completely mechanical system, the thermal valve checks the temperature in the pump, opening/closing the by-pass circuit letting new and fresh water flow inside before the elements are damaged. Simple solution without electronic devices.

• Total Stop
Releasing the gun trigger the pump stops automatically avoiding element damages during the by-pass phase. Pulling the trigger, the high-pressure cleaner starts automatically. Max pump protection.

• Low voltage and delayed Total Stop
To avoid quick and multiple start and shut down of the motor/pump group whenever the gun trigger is pulled and released, this disposal delays the machine shut down of about 15 seconds. Prevention, energy saving, top safety and pump longer life.

• Motor low rotation speed
The electric motor transfers the same number of revolutions to the pump. With a 4 poles motor there is a lower rotation speed of the components (1400 RPM in case of 50Hz or 1750 RPM in case of 60 Hz) granting longer pump life. Extending lifetime solution.

• Pump with nickel-plated brass head
The nickel-plating treatment improves the basic features (greater hardness and improved resistance to the chemical products used in washing), reducing the deterioration caused by cavitation.

Technical information

Code	Model	Page	Operating pressure (max pressure)	Operating pressure (max pressure)	Delivery rate	Delivery rate	Absorbed power	RPM	Voltage	Max inlet water temperature	Weight with packaging	Packaging	Pieces for pallet
			bar (max bar)	psi (max psi)	l/h	GPM	W	RPM	V - Hz	°C	Kg/lbs	cm	n°(cm x cm)
36084-00005	MYSTIC 1309 XP	12	140 (180)	2030(2610)	540	2.38	2800	2800	230 - 50	40	32.5/71	60x38 h 72	12 (120-80)
36087-00001	ALASKA 1409 XP	14	140 (180)	2030 (2610)	540	2.4	2800	2800	230 - 50	40	28/62	39x39 h 61	18 (120x80)
36087-00006	HKA 1409 XP	16	140 (180)	2030 (2610)	540	2.40	2800	2800	230 - 50	40	28/62	39x39 h 71	18 (120x80)
36091-00001	MAINE 1409 XP	18	140 (180)	2030 (2610)	540	2.40	2800	2800	230 - 50	40	23/50	39x39 h 71	18 (120x80)
36091-00016	MAINE HR 1409 XP	20	140 (180)	2030 (2610)	540	2.40	2800	2800	230 - 50	40	23/50	93x43 h 51	12 (131x95)
36153-00004	KAB 1408 LP	22	130 (140)	1885(2030)	565	2.4	2400	2800	230 - 50	40	21/46	47x43 h 37	12 (120x80)
on request	KAB 2W 1408 LP	22	130 (140)	1885(2030)	565	2.4	2400	2800	230 - 50	40	28/61.6	47x43 h 37	12 (120x80)
36153-00001	KAB 1509 LP	24	130 (140)	1885(2030)	565	2.4	2400	2800	230 - 50	40	23/50	47x43 h 37	12 (120x80)
on request	KAB 2W 1509 LP	24	130 (140)	1885(2030)	565	2.4	2400	2800	230 - 50	40	30/66	47x43 h 37	12 (120x80)
36016-00019	LITE 1510 XP	26	135 (150)	1958 (2175)	600	2.64	2900	2800	230 - 50	40	28/61	30x50 h 40	10 (120x80)
36016-00023	LITE 2W 1510 XP	26	135 (150)	1958 (2175)	600	2.64	2900	2800	230 - 50	40	33/72	65x57 h 65	10 (120x80)
36016-00020	LITE PRO 1510 LP	28	140 (150)	2030 (3190)	600	2.64	2900	1400	230 - 50	40	38/83	30x50 h 40	10 (120x80)
36016-00024	LITE 2W PRO 1510 LP	28	140 (150)	2030 (2175)	600	2.64	2900	1400	230 - 50	40	43/94	65x57 h 65	10 (120x80)
36086-00027	BOLT 1510 LP	30	150 (180)	2175(2610)	540	2.38	2800	1400	230 - 50	40	32/70	90x90 h 83	12 (120-80)
36085-00025	ARIZONA 1209 LP	32	120 (150)	1740(2175)	510	2.23	2300	1400	230 - 50	40	30.5/67	60x38 h 72	12 (120-80)
36085-00028	ARIZONA 1311 LP	32	130 (150)	1885(2175)	660	2.90	2900	1400	230 - 50	40	32.5/71	60x38 h 72	12 (120-80)
36085-00032	ARIZONA 1311 LP	32	130 (150)	1885(2175)	660	2.90	2900	1400	230 - 50	40	32.5/71	60x38 h 72	12 (120-80)
36085-00039	HA 1311 LP	34	130 (150)	1885(2175)	660	2.90	2900	1400	230 - 50	40	32.5/71	60x38 h 72	12 (120-80)
36085-00044	HA 1510 LP	34	150 (160)	2175(2320)	600	2.64	3000	1400	230 - 50	40	32.5/71	60x38 h 72	12 (120-80)
36089-00001	TUCSON 1211 LP	36	30÷120(150)	435÷1740(2175)	660	2.91	3000	1400	230 - 50	40	38.6/85	75x40 h 68	6 (120x80)
36089-00002	TUCSON 1509 LP	36	30÷150(160)	435÷2175(2320)	540	2.38	3000	1400	230 - 50	40	35/77	75x40 h 68	6 (120x80)
36089-00003	TUCSON 1713 LP	36	30÷170(190)	435÷2465(2755)	780	3.43	6000	1400	400 - 50	40	44/97	75x40 h 68	6 (120x80)
36089-00004	TUCSON 2017 LP	36	30÷200(230)	435÷2900(3335)	1000	4.49	9400	1400	400 - 50	40	46/101	75x40 h 68	6 (120x80)
36089-00013	HNR 1509 LP	38	150 (160)	2175 (2320)	540	2.40	3000	1400	230 - 50	60	33/72	75x40 h 68	6 (120x80)
36089-00014	HNR 1713 LP	38	30÷170(190)	435÷2465(2755)	780	3.43	6000	1400	400 - 50	60	42/92	75x40 h 68	6 (120x80)
36089-00015	HNR 2017 LP	38	30÷200(230)	435÷2900(3335)	1000	4.49	9400	1400	400 - 50	60	44/97	75x40 h 68	6 (120x80)
36090-00001	TUCSON XL 2015 LP	40	30÷200(230)	435÷2900(3335)	900	3.96	7000	1400	400 - 50	40	66/145	75x40 h 68	1 (120x80)
36090-00002	TUCSON XL 2021 LP	40	30÷200(230)	435÷2900(3335)	1260	5.55	9400	1400	400 - 50	40	72.3/159	75x40 h 68	1 (120x80)
36090-00003	TUCSON XL 2515 LP	40	30÷250(280)	435÷3600(4061)	900	3.96	8500	1400	400 - 50	40	73/161	75x40 h 68	1 (120x80)
36090-00008	HNR XL 2015 LP	42	30÷200(230)	435÷2900(3335)	900	3.96	7000	1400	400 - 50	60	65/143	75x40 h 68	1 (120x80)
36090-00009	HNR XL 2021 LP	42	30÷200(230)	435÷2900(3335)	1260	5.55	9400	1400	400 - 50	60	70/154	75x40 h 68	1 (120x80)
36090-00010	HNR XL 2515 LP	42	30÷250(280)	435÷3600(4061)	900	3.96	8500	1400	400 - 50	60	70/154	75x40 h 68	1 (120x80)
36082-00154	COLUMBIA R 1211 LP	44	30÷120 (150)	435÷1812 (2175)	660	2.91	3000	1400	230 - 50	40	40/88	55x62 h 59	8 (120x100)
36082-00155	COLUMBIA R 2015 LP	44	30÷200(230)	435÷2900(3335)	900	3.96	7000	1400	400 - 50	40	54/118	55x62 h 59	8 (120x100)
36082-00170	HCR 1211 LP	46	30÷120(150)	435÷1740(2175)	660	2.91	3000	1400	230 - 50	60	50/110	55x62 h 59	8 (120x100)
36082-00137	HCR 1515 LP	46	30÷150(180)	435÷2175(2610)	900	3.96	5000	1400	400 - 50	60	50/110	55x62 h 59	8 (120x100)
36082-00138	HCR 2015 LP	46	30÷200(230)	435÷2900(3335)	900	3.96	7000	1400	400 - 50	60	59/130	55x62 h 59	8 (120x100)
36082-00139	HCR 2021 LP	46	30÷200(230)	435÷2900(3335)	1260	5.55	9400	1400	400 - 50	60	60/132	55x62 h 59	8 (120x100)
36082-00140	HCR 2515 LP	46	30÷250(280)	435÷3600(4061)	900	3.96	8500	1400	400 - 50	60	60/132	55x62 h 59	8 (120x100)
36092-00006	KCR 2015 LP	48	30÷200(230)	435÷2900(3335)	900	3.96	7000	1400	400 - 50	40	70/154	80x60 h 65	6 (120x80)

Code	Model	Page	Operating pressure (max pressure)	Operating pressure (max pressure)	Delivery rate	Delivery rate	Absorbed power	RPM	Voltage	Max inlet water temperature	Weight with packaging	Packaging	Pieces for pallet
			bar (max bar)	psi (max psi)	l/h	GPM	W	RPM	V - Hz	°C	Kg/lbs	cm	n°(cm x cm)
36092-00011	KCR 2021 LP	48	30÷200(230)	435÷2900(3335)	1260	3.96	9400	1400	400 - 50	40	71/156	80x60 h 65	6 (120x80)
36092-00010	KCR 2515 LP	48	30÷250(280)	435÷3600(4061)	900	3.96	8500	1400	400 - 50	40	71/156	80x60 h 65	6 (120x80)
36077-00002	MCHPV 1515 LP	50	30÷150(180)	435÷2175(2610)	900	3.96	5000	1400	400 - 50	40	45/99	75x50 h 35	9 (120x80)
36077-00003	MCHPV 2015 LP	50	30÷200(230)	435÷2900(3335)	900	3.96	7000	1400	400 - 50	40	48/106	75x50 h 35	9 (120x80)
36077-00004	MCHPV 2021 LP	50	30÷200(210)	435÷2900(3045)	1260	5.55	9400	1400	400 - 50	40	60/132	75x50 h 35	9 (120x80)
36077-00037	MCHPX 1211 LP	50	30÷120(150)	435÷1740(2175)	660	2.91	3000	1400	230 - 50	40	48/106	75x50 h 35	9 (120x80)
36077-00038	MCHPX 2015 LP	50	30÷200(230)	435÷2900(3335)	900	3.96	7000	1400	400 - 50	40	60/132	75x50 h 35	9 (120x80)
36019-00062	INDO 2521 E LP	52	30÷250(260)	435÷3600(3770)	1290	5.6	10000	1400	400 - 50	85	140/309	135x88 h 115	1 (130x82)
36019-00063	INDO 3518 E LP	52	30÷350(360)	435÷5076(5221)	1110	4.8	11500	1400	400 - 50	85	145/320	135x88 h 115	1 (130x82)
36019-00066	INDO 2030 E LP	52	30÷200(220)	435÷2900(3190)	1860	8.1	11500	1400	400 - 50	85	195/370	135x88 h 115	1 (130x82)
36019-00068	LENA 5015 E LP	54	50÷500(520)	725÷7250(7541)	990	4.3	15000	1400	400 - 50	60	220/485	135x88 h 115	1 (130x82)
36019-00069	LENA 5018 E LP	54	50÷500(520)	725÷7250(7541)	1110	4.8	18500	1400	400 - 50	60	230/507	135x88 h 115	1 (130x82)
36019-00070	LENA 5021 E LP	54	50÷500(520)	725÷7250(7541)	1260	5.55	22000	1400	400 - 50	60	235/518	135x88 h 115	1 (130x82)
36019-00074	LENA 2042 E LP	54	30÷200(215)	435÷2900(3118)	2520	11.09	18500	1400	400 - 50	60	230/507	135x88 h 115	1 (130x82)
36019-00084	IRTYS 7015	56	70÷700(770)	1015÷10152(11167)	900	3.96	23000	1400	400 - 50	60	235/518	111x90 h 120	1 (111x90)
36113-00077	THERMIC 5.1H	58	30÷160(180)	435÷2320(2610)	570	2.51	5 hp	3400	-	40	37.5/83	55x55 h 70	8 (120x80)
36001-00053	THERMIC 2W LITE 6L	60	30÷200(220)	435÷2900(3190)	630	2.7	6,5 hp	3400	-	40	28/61,7	55x67 h 80	8 (120x80)
36113-00027	THERMIC 6,5	62	30÷180(210)	435÷2610(3045)	690	2.77	6,5 hp	3400	-	40	38/84	47x57 h57	12 (120x100)
36113-00081	THERMIC 9.1 L	64	30÷190(200)	435÷2755(2900)	780	3.44	8 hp	3400	-	40	56/123	70x57 h 70	9 (120x80)
36021-00034	THERMIC 2W 9H	66	30÷210(220)	435÷3045(3190)	900	3.96	9 hp	3400	-	50	48/106	86x67 h 80	1 (67x86)
36021-00036	THERMIC 2W 13L	66	30÷290(310)	435÷4206(4496)	900	3.96	13 hp	3400	-	54	48/106	86x67 h 80	1 (67x86)
36021-00035	THERMIC 2W 13H	66	30÷290(310)	435÷4206(4496)	900	3.96	13 hp	3400	-	54	48/106	86x67 h 80	1 (67x86)
36001-00052	THERMIC 2W LITE 13L	68	30÷290(310)	435÷4206(4496)	900	3.96	13 hp	3400	-	60	35/77	55x67 h 89	9 (120x80)
36022-00030	THERMIC 10.1D 1621	70	30÷160(180)	435÷2320(2610)	1260	5.55	9,3 hp	1560	-	60	124/231	95x68 h 95	1 (120x80)
36022-00029	THERMIC 10.1D 2016	70	30÷200(230)	435÷2900(3335)	960	4.22	9,3 hp	1560	-	60	124/231	95x68 h 95	1 (120x80)
36021-00038	THERMIC 2W PRO 13L	72	30÷250(260)	435÷3600(3770)	1020	4.4	13 hp	1560	-	40	70/154	86x67 h 80	1 (67x86)
36021-00037	THERMIC 2W PRO 13H	72	30÷250(260)	435÷3600(3770)	1020	4.4	13 hp	1560	-	40	70/154	86x67 h 80	1 (67x86)
36113-00013	THERMIC 13 H	74	30÷250(280)	435÷3600(4061)	1080	4.76	13 hp	1560	-	40	61/134	100x66 h 92	1 (120x80)
36113-00035	THERMIC 13 HF	76	30÷250(280)	435÷3600(4061)	1080	4.76	13 hp	1560	-	40	61/134	100x66 h 92	1 (120x80)
36018-00043	THERMIC 18 3518 BS	78	30÷350(360)	435÷5076(5221)	1080	4.75	18 hp	1560	-	60	165/363	130x82 h 120	1 (130x82)
36018-00042	THERMIC 22 3521 H	78	30÷350(360)	435÷5076(5221)	1320	5.8	22 hp	1560	-	60	195/429	130x82 h 120	1 (130x82)
36018-00041	THERMIC 22 4018 H	78	30÷400(415)	435÷5800(6019)	1110	4.8	22 hp	1560	-	60	195/429	130x82 h 120	1 (130x82)
36018-00040	THERMIC 22 5015 H	78	50÷500(520)	725÷7250(7541)	900	3.96	22 hp	1560	-	60	195/429	130x82 h 120	1 (130x82)
36018-00045	THERMIC 22 2730 H	78	30÷270(280)	435÷3916(4061)	1800	7.92	22 hp	1560	-	60	195/429	130x82 h 120	1 (130x82)
36018-00048	THERMIC 26 3523 K	80	30÷350(360)	435÷5076(5221)	1380	6.07	23,7 hp	1450	-	60	320/705	145x105 h 130	1 (145x105)
36018-00047	THERMIC 26 4020 K	80	30÷400(415)	435÷5800(6019)	1200	5.28	23,7 hp	1450	-	60	320/705	145x105 h 130	1 (145x105)
36018-00046	THERMIC 26 5016 K	80	50÷500(520)	725÷7250(7541)	990	4.3	23,7 hp	1450	-	60	320/705	145x105 h 130	1 (145x105)
36018-00062	THERMIC 31 7015 BS	82	70÷700(770)	1015÷10152(11167)	900	3.96	31 hp	1560	-	60	320/705	111x90 h 120	1 (111x90)
36018-00063	THERMIC 26 7013 K	84	70÷700(770)	1015÷10152(11167)	780	3.44	23,7 hp	1450	-	60	320/705	145x105 h 130	1 (145x105)

Mystic-R

MORE INFO

CHARACTERISTICS

• Three steel pistons, brass axial pump head with built-in by-pass valve. • Pump with double seal • Total stop. • Suction and delivery Stainless steel valves. • Detergent built-in tank for indirect suction. • Glicerine pressure gauge. • Hose holder. • Accessory holder. • Ergonomic handle. • Power cable 5 m

TECHNICAL DATA

	Mystic-R 1409 XP
code	36084-00005
rated/max pressure	140/180 bar - 2030/2610 psi
max delivery flow rate	540 l/h - 2.4 gpm
abs. power/supply	2800 W/230V 1~50Hz
motor power	2,0 kW
pump model	MPBX1/2800 rpm
T max water inlet	40°C
dimension (cm)/weight	43x50x85/28 Kg (61,6 lbs)

PLUS

Axial motor pump with stainless steel pistons, brass head, double water seal

Glycerine bath pressure gauge to constantly monitor the operating pressure of the high pressure cleaner with reading guarantee

Integrated cleaning tank for indirect suction of the chemical product

Sturdy protective steel cover to protect the motor pump against accidental impacts

STANDARD EQUIPMENT

• 00080-02576 Gun M22	• 00080-02770 Lance M22.	• 10002-12433 High pressure nozzle set	• 00080-02089 High pressure hose 8 m	

OPTIONAL

• 10001-10252 High-pressure wall mount hose reel (hose not included)	• 00080-03481 Turbo nozzle head	• 00080-02981 Turbo lance M22 - 0,35	• 00080-02957 Sand blasting lance M22 - 0,40	

Alaska

MORE INFO

CHARACTERISTICS

• Three steel pistons, brass axial pump head with built-in by-pass valve. • Pump with double seal • Total Stop. • Suction and delivery Stainless steel valves. • Detergent built-in tank for indirect suction. • Power cable holder. • Accessory holder. • Ergonomic handle. • 1lt detergent tank. • Power cable 5 m

TECHNICAL DATA

	Alaska 1409 XP
code	36087-00001
rated/max pressure	140/180 bar - 2030/2610 psi
max delivery flow rate	540 l/h - 2.4 gpm
abs. power/supply	2800 W/230V 1~50Hz
motor power	2,0 kW
pump model	MPBX1/2800 rpm
T max water inlet	40°C
dimension (cm)/weight	35x40x87/28 Kg (61,6 lbs)

PLUS

Axial motor pump with stainless steel pistons, brass head, double water seal

Convenient and functional rotary switch for easy switching on and off

Integrated cleaning tank with a capacity of 1 litre for indirect suction of the chemical with a level visible from the outside

Robust structure that gives great stability to the high pressure cleaner during use

STANDARD EQUIPMENT

• 00080-02576 Gun M22	• 00080-02770 Lance M22.	• 10002-12433 High pressure nozzle set	• 00080-02089 High pressure hose 8 m	

OPTIONAL

• 00080-02957 Sandblasting lance	• 00080-03481 Turbo nozzle head	• 00080-02981 Turbo lance M22 - 0,35	• 00080-02957 Sand blasting lance M22 - 0,40	

HKA

T.S Total Stop

MORE INFO

CHARACTERISTICS

• Three steel pistons, brass axial pump head with built-in by-pass valve. • Pump with double seal • Total Stop. • Suction and delivery Stainless steel valves. • Detergent built-in tank for indirect suction. • Power cable holder. • Hose reel in pressure. • Accessory holder. • Ergonomic handle. • 1l detergent tank.

TECHNICAL DATA

	HKA 1409 XP
code	36087-00006
rated/max pressure	140/180 bar - 2030/2610 psi
max delivery flow rate	540 l/h - 2.4 gpm
abs. power/supply	2800 W/230V 1~50Hz
motor power	2,0 kW
pump model	MPBX1/2800 rpm
T max water inlet	40°C
dimension (cm)/weight	35x40x96/28 Kg (61,6 lbs)

PLUS

Axial motor pump with stainless steel pistons, brass head, double water seal

Practical hose reel connected under pressure to use only the necessary length of hose and to rewind it easily after use

Convenient and functional rotary switch for easy switching on and off

Integrated cleaning tank with a capacity of 1 litre for indirect suction of the chemical with a level visible from the outside

STANDARD EQUIPMENT

• 00080-01701 Gun M22 - 3/8.	• 00080-01724 Lance M22 high/low pressure	• 00080-03186 Nozzle type 035	• 00080-02981 Turbo lance	• 00080-02294 High pressure hose R1 8 m

OPTIONAL

• 00080-02981 Turbo lance M22 - 0,35	• 00080-02957 Sand blasting lance M22 - 0,40			

Maine

MORE INFO

CHARACTERISTICS

• Three steel pistons, brass axial pump head with built-in by-pass valve. • Double water seal • Total Stop. • Suction and delivery Stainless steel valves. • Integrated detergent suction with external suction probe. • Power cable holder. • High pressure hose holder. • Accessory holder. • Ergonomic handle.

TECHNICAL DATA

	Maine 1409 XP
code	36091-00001
rated/max pressure	140/180 bar - 2030/2610 psi
max delivery flow rate	540 l/h - 2.4 gpm
abs. power/supply	2800 W/230V 1~50Hz
motor power	2,0 kW
pump model	MPBX1/2800 rpm
T max water inlet	40°C
dimension (cm)/weight	39x39x71/23 Kg (50,7 lbs)

PLUS

Axial motor pump with stainless steel pistons, brass head, double water seal

Ergonomic handle for lifting and manual transportation, it can also serve as a practical reel for electrical cable or high-pressure pipe

Convenient and functional rotary switch for easy switching on and off

Folding handle to reduce dimensions and to facilitate movement. If fully extended it makes it possible to pull the product on the rear wheels

STANDARD EQUIPMENT

• 00080-02541 Gun M22	• 00080-02804 Lance M22 high/ low pressure	• 00080-02420 High pressure hose 8 m		

OPTIONAL

• 00080-02957 Sandblasting lance	• 00080-02981 Turbo lance			

Maine HR

MORE INFO

CHARACTERISTICS

• Three steel pistons, brass axial pump head with built-in by-pass valve. • Double water seal • Total Stop. • Suction and delivery Stainless steel valves. • Integrated detergent suction with external suction probe. • Power cable holder. • Hose reel in pressure with h.p. hose 10m included. • Accessory holder. • Ergonomic handle. • Full assembled

TECHNICAL DATA

	Maine HR 1409 XP
code	36091-00016
rated/max pressure	140/180 bar - 2030/2610 psi
max delivery flow rate	540 l/h - 2.4 gpm
abs. power/supply	2800 W/230V 1~50Hz
motor power	2,0 kW
pump model	MPBX1/2800 rpm
T max water inlet	40°C
dimension (cm)/weight	39x39x95/26 Kg (57 lbs)

PLUS

Axial motor pump with stainless steel pistons, brass head, double water seal

Practical hose reel connected under pressure to use only the necessary length of hose and to rewind it easily after use

Convenient and functional rotary switch for easy switching on and off

Folding handle to reduce dimensions and to facilitate movement. If fully extended it makes it possible to pull the product on the rear wheels

STANDARD EQUIPMENT

• 00080-02541 Gun M22	• 00080-02804 Lance M22 high/ low pressure	• 00080-02389 High pressure hose 10 m		

OPTIONAL

• 00080-02957 Sandblasting lance	• 00080-02981 Turbo lance			

KAB 1408

T.S Total Stop

NEW

KAB 1408 LP model

KAB 2W 1408 LP model

MORE INFO

CHARACTERISTICS

• Three pistons, aluminium pump head with built-in by-pass valve • Total stop. • Integrated detergent suction with external suction probe • Pressure regulator. • Glicerine pressure gauge. • Accessory holder. • Ergonomic handle. • Trolley with wheels Ø 250 mm (only model 2W)

TECHNICAL DATA

	KAB 1408 LP	KAB 2W 1408 LP
code	36153-00004	on request
rated/max pressure	130/140 bar - 1885/2030 psi	130/140 bar - 1885/2030 psi
max delivery flow rate	565 l/h - 2.4 gpm	565 l/h - 2.4 gpm
abs. power/supply	2400 W/230V 1~50Hz	2400 W/230V 1~50Hz
motor power	2,1 kW	2,1 kW
pump model	CL2.5/2800 rpm	CL2.5/2800 rpm
T max water inlet	40°C	40°C
dimension (cm)/weight	47x43x37/21 Kg (46 lbs)	58x49,5x56/28 Kg (61,6 lbs)

PLUS

Linear motor pump with stainless steel valves and aluminium head

Convenient and functional rotary switch for easy switching on and off

Ergonomic handle with anti-vibration feet for stability (Kab). Trolley version (2W) with large rear wheels with a diameter of 250 mm to improve its transportation capacity

Sturdy painted steel frame handle for easy movement

STANDARD EQUIPMENT

• 00080-02541 Gun G1/4" M	• 00080-05320 Lance M22 high/low pressure	• 00080-02420 High pressure hose 8 m		

OPTIONAL

KAB 1509

KAB 1509 LP model

KAB 2W 1509 LP model

MORE INFO

CHARACTERISTICS

• Three ceramic coated pistons, overdimensioned brass linear pump head with built-in by-pass valve. • Total stop • Integrated detergent suction with external suction probe • Pressure regulator. • Glicerine pressure gauge. • Accessory holder. • Ergonomic handle. • Trolley with wheels Ø 250 mm (only model 2W)

TECHNICAL DATA

	KAB 1509 LP	KAB 2W 1509 LP
code	36153-00001	on request
rated/max pressure	130/140 bar - 1885/2030 psi	130/140 bar - 1885/2030 psi
max delivery flow rate	565 l/h - 2.4 gpm	565 l/h - 2.4 gpm
abs. power/supply	2400 W/230V 1~50Hz	2400 W/230V 1~50Hz
motor power	2,1 kW	2,1 kW
pump model	CL4.0/2800 rpm	CL4.0/2800 rpm
T max water inlet	40°C	40°C
dimension (cm)/weight	47x43x37/23 Kg (50 lbs)	58x49,5x56/30 Kg (66 lbs)

PLUS

Linear motor pump with stainless steel valves and brass head

Convenient and functional rotary switch for easy switching on and off

Ergonomic handle with anti-vibration feet for stability (Kab). Trolley version (2W) with large rear wheels with a diameter of 250 mm to improve its transportation capacity

Sturdy painted steel frame handle for easy movement

STANDARD EQUIPMENT

• 00080-02541 Gun G1/4" M	• 00080-05320 Lance M22 high/low pressure	• 00080-02420 High pressure hose 8 m		

OPTIONAL

Lite/Lite 2W

LITE 2W 1510 XP model

LITE 1510 XP model

MORE INFO
LITE

MORE INFO
LITE 2W

CHARACTERISTICS

• Three steel pistons, brass axial pump head with built-in by-pass valve • Easy to transport thanks to a practical top grip and anti-vibration supports (only model Lite) • Induction 2-pole motor (2800 rpm) • Trolley with wheels Ø 250 mm (only 2W model) • Glicerine pressure gauge. • EASY START device • Total Stop system • Rotary switch • Motor thermal protection

TECHNICAL DATA

	LITE 1510 XP	LITE 2W 1510 XP
code	36016-00019	36016-00023
rated/max pressure	135/150 bar - 1958/2175 psi	135/150 bar - 1958/2175 psi
max delivery flow rate	600 l/h - 2.64 gpm	600 l/h - 2.64 gpm
abs. power/supply	2900 W/230V 1~50Hz	2900 W/230V 1~50Hz
motor power	2,1 kW	2,1 kW
pump model	GXR/2800 rpm	GXR/2800 rpm
T max water inlet	40°C	40°C
dimension (cm)/weight	26x47x37/25 Kg (55 lbs)	60x43x93/30 Kg (66 lbs)

PLUS

Axial motor pump with stainless steel pistons, brass head, double water seal

Convenient and functional rotary switch for easy switching on and off

Sturdy painted steel frame with anti-vibration feet for stability, ergonomic handle for easy movement (Lite). Trolley version (2W) with large rear wheels with a diameter of 250 mm to improve its transportation capacity

Hose reel (optional on the Trolley version) connected under pressure to use only the necessary length of hose and to rewind it easily after use

STANDARD EQUIPMENT

• 00080-02576 Gun G1/4" M	• 00080-01740 Lance M22 high/ low pressure	• 00080-03230 Nozzle type 030	• 10002-04140 H.p. hose 10 m	• 00070-00052 Detergent filter

OPTIONAL

• 10002-03655 Turbo lance	• 10002-04322 2 Wheels cart	• 00080-01541 Hose-reel kit (only 2W model)	• 00058-00632 25 m pipe cleaning hose	

Lite PRO/Lite PRO 2W

LITE PRO 2W 1510 LP model

LITE PRO 1510 LP model

T.S Total Stop

CRANKSHAFT

RPM 1400

MORE INFO

LITE PRO

MORE INFO

LITE PRO 2W

CHARACTERISTICS

• Three full ceramic pistons, brass linear pump head with by-pass valve • Easy to transport thanks to a practical top grip and anti-vibration supports (only model Lite) • Trolley with wheels Ø 250 mm (only 2W model) • 4-pole motor (1400 rpm) • Glicerine pressure gauge. • EASY START device • Total Stop system • Rotary switch • Motor thermal protection

TECHNICAL DATA

	LITE PRO 1510 XP	LITE PRO 2W 1510 XP
code	36016-00020	36016-00024
rated/max pressure	140/150 bar - 2030/2175 psi	140/150 bar - 2030/2175 psi
max delivery flow rate	600 l/h - 2.64 gpm	600 l/h - 2.64 gpm
abs. power/supply	2900 W/230V 1~50Hz	2900 W/230V 1~50Hz
motor power	2,1 kW	2,1 kW
pump model	CL3.1/1400 rpm	CL3.1/1400 rpm
T max water inlet	40 °C	40 °C
dimension (cm)/weight	26x47x37/35 Kg (77 lbs)	60x43x93/40 Kg (88 lbs)

PLUS

4 pole induction motor (1400 rpm): the low rotation speed significantly extends the life of the components inside the motor pump, guaranteeing greater efficiency and silence

Integral ceramic self-priming three-piston linear pump, the best solution for a professional product

Sturdy painted steel frame with anti-vibration feet for stability, ergonomic handle for easy movement (Lite pro). Trolley version (pro 2W) with large rear wheels with a diameter of 250 mm to improve its transportation capacity

Hose reel (optional on the Trolley version) connected under pressure to use only the necessary length of hose and to rewind it easily after use

STANDARD EQUIPMENT

• 00080-01009 Gun M22 - 3/8.	• 10002-03553 Lance M22 high/low pressure	• 00080-01368 Stainless steel nozzle type 040	• 00014-00276 High pressure hose 10 m	• 00070-00052 Detergent filter

OPTIONAL

• 10002-03624 Turbo lance	• 10002-04322 2W cart	• 00080-01541 Hose-reel kit (only 2W model)	• 00058-00632 25 m pipe cleaning hose	

Bolt

T.S Total Stop

CRANKSHAFT

RPM 1400

MORE INFO

CHARACTERISTICS

• Three ceramic coated pistons, overdimensioned brass linear pump head with built-in by-pass valve. • Total stop • Suction and delivery Stainless steel valves. • Integrated detergent suction with external suction probe • Pressure regulator. • Glicerine pressure gauge. • Accessory holder. • Ergonomic handle.

TECHNICAL DATA

	Bolt 1510 LP
code	36086-00027
rated/max pressure	150/180 bar - 2175/2610 psi
max delivery flow rate	540 l/h - 2.4 gpm
abs. power/supply	2800 W/230V 1~50Hz
motor power	2,1 kW
pump model	MP4/1400 rpm
T max water inlet	40°C
dimension (cm)/weight	43x50x85/36 Kg (79,3 lbs)

PLUS

Professional motor pump with 4-pole motor (1400 rpm) and self-priming linear pump: the low rotation speed significantly extends the life of the components inside the motor pump, guaranteeing greater efficiency and silence

Convenient and functional rotary switch for easy switching on and off

Pressure regulating valve to vary the power of the water jet according to actual requirements

Practical hose reel (optional) connected under pressure to use only the necessary length of hose and to rewind it easily after use

STANDARD EQUIPMENT

• 00080-02541 Gun M22	• 00080-02988 Lance M22 high/ low pressure	• 00080-02389 High pressure hose R1 10 m	• 00070-00479 Water filter 3/4F-3/4M	

OPTIONAL

• 10002-08676 Hose reel set (hose not included)	• 10001-10148 Hose reel with 15 m R1 hose included	• 00080-02986 Lance Turbo M22 - 0,30	• 00080-02957 Sandblasting lance	

Arizona

T.S Total Stop

CRANKSHAFT

RPM 1400

MORE INFO

CHARACTERISTICS

• 4 poles electrical motor (1400 rpm) with thermal protection. • Three ceramic coated pistons, brass linear pump head with built-in by-pass valve. • Suction and delivery Stainless steel valves. • Detergent built-in tank for indirect suction. • Pressure regulator. • Glicerine pressure gauge. • Hose reel **(optional)**. • Accessory holder. • Hose-holder. • Ergonomic handle. • 7,5 lt. detergent tank.

TECHNICAL DATA

	Arizona 1209 LP	Arizona 1311 LP	Arizona 1311 LP with hose reel
code	36085-00025	36085-00028	36085-00032
rated/max pressure	120/150 bar - 1740/2175 psi	130/150 bar - 1885/2175 psi	130/150 bar - 1885/2175 psi
max delivery flow rate	510 l/h - 2.24 gpm	660 l/h - 2.90 gpm	660 l/h - 2.90 gpm
abs. power/supply	2300 W/230V 1~50Hz	2900 W/230V 1~50Hz	2900 W/230V 1~50Hz
motor power	1,7 kW	2,1 kW	2,1 kW
pump model	MP3/1400 rpm	MP3/1400 rpm	MP3/1400 rpm
T max water inlet	40°C	40°C	40°C
dimension (cm)/weight	59x37x87/26 Kg (57 lbs)	59x37x87/28 Kg (61 lbs)	59x37x87/28 Kg (61 lbs)

PLUS

Professional motor pump with 4-pole motor (1400 rpm) and self-priming linear pump: the low rotation speed significantly extends the life of the components inside the motor pump, guaranteeing greater efficiency and silence

Pressure regulating valve to vary the power of the water jet according to actual requirements

Convenient and functional rotary switch for easy switching on and off

Detergent tank integrated into the frame with a capacity of 7.5 litres for indirect suction of the chemical product

STANDARD EQUIPMENT

• 00080-02576 Gun M22	• 00080-01701 Gun M22 - 3/8. (mod. 36085-00032)	• 00080-02770 Lance M22.	• 10002-12433 High pressure nozzle set (mod. 1209) • 10002-12357 High pressure nozzle set (mod. 1311)	• 00080-02332 High pressure hose 8 m • 00080-02258 High pressure hose 8 m (mod. 36085-00032)

OPTIONAL

• 00080-03481 Turbo nozzle head	• 00080-02089 8 m High pressure hose - 1/4" M22 - Ø 1/4" 210 bar (mod. 1311 LP)	• 00080-02966 Lance Turbo type 1 M22 - 0,45	• 00080-02957 Sandblasting lance	

HA

T.S Total Stop

CRANKSHAFT

RPM 1400

MORE INFO

CHARACTERISTICS

• 4 poles electrical motor (1400 rpm) with thermal protection. • Three ceramic coated pistons, brass linear pump head with built-in by-pass valve. • Suction and delivery Stainless steel valves. • Detergent built-in tank for indirect suction. • Pressure regulator. • Glicerine pressure gauge. • Accessory holder. • Hose-holder. • Ergonomic handle. • 7,5 l detergent tank.

TECHNICAL DATA

	HA 1311 LP	HA 1510 LP
code	36085-00039	36085-00044
rated/max pressure	130/150 bar - 1885/2175 psi	150/160 bar - 2175/2320 psi
max delivery flow rate	660 l/h - 2.9 gpm	600 l/h - 2.64 gpm
abs. power/supply	2900 W/230V 1~50Hz	3000 W/230V 1~50Hz
motor power	2,1 kW	2,1 kW
pump model	MP3/1400 rpm	MP3/1400 rpm
T max water inlet	40°C	40°C
dimension (cm)/weight	59x37x87/28 Kg (61 lbs)	59x37x87/28 Kg (61 lbs)

PLUS

Professional motor pump with 4-pole motor (1400 rpm) and self-priming linear pump: the low rotation speed significantly extends the life of the components inside the motor pump, guaranteeing greater efficiency and silence

Pressure regulating valve to vary the power of the water jet according to actual requirements

Convenient and functional rotary switch for easy switching on and off

Detergent tank integrated into the frame with a capacity of 7.5 litres for indirect suction of the chemical product

STANDARD EQUIPMENT

• 00080-01701 Gun M22 - 3/8.	• 00080-01724 Lance M22 high/low pressure	• 00080-03188 Nozzle type 045 (mod. 1311) • 00080-03185 Nozzle type 030 (mod. 1510)	• 00080-02254 High pressure hose 8 m	

OPTIONAL

• 00080-03481 Turbo nozzle head	• 00080-02254 8 m High pressure hose - 3/8" M22 - Ø 1/4" - 210 bar	• Turbo Lance code: 00080-02966 - (mod. 1311) 00080-02986 - (mod. 1510)	• 00080-02957 Sandblasting lance	

Tucson

T.S Total Stop 24V

Models:
1713 LP/2017 LP

T.S Total Stop

Models:
1211 LP/1509 LP

CRANKSHAFT

RPM 1400

Models:
1713 LP/2017 LP

MORE INFO

CHARACTERISTICS

• 4 poles electrical motor (1400 rpm) with thermal protection (mod. 1 ph) • 4 poles electrical motor (1400 rpm) with thermal protection and water cooling (mod. 3 ph) • Three ceramic coated pistons (Tucson 1211/1509). Three full ceramic pistons (Tucson 1713/2017) • Suction and delivery Stainless steel valves. • Low voltage and delayed Total Stop (mod. 3 ph) • Detergent built-in tank for indirect suction (2,8 lt.). • Pressure regulator. • Glicerine pressure gauge.

TECHNICAL DATA

	Tucson 1211 LP	Tucson 1509 LP	Tucson 1713 LP	Tucson 2017 LP
code	36089-00001	36089-00002	36089-00003	36089-00004
rated/max pressure	120/150 bar - 1740/2175 psi	150/160 bar - 2175/2320 psi	170/190 bar - 2465/2755 psi	200/230 bar - 2900/3335 psi
max delivery flow rate	660 l/h - 2.9 gpm	540 l/h - 2.37 gpm	780 l/h - 3.43 gpm	1020 l/h - 4.4 gpm
abs. power/supply	3000 W/230V 1~50Hz	3000 W/230V 1~50Hz	5200 W/400V 3~50Hz	7500 W/400V 3~50Hz
motor power	2,2 kW	2,2 kW	4,0 kW	5,5 kW
pump model	MP3/1400 rpm	MP3/1400 rpm	MPW3.5/1400 rpm	MPW3.5/1400 rpm
T max water inlet	40°C	40°C	40°C	40°C
dimension (cm)/weight	76x41x75/33 Kg (72,6 lbs)	76x41x75/33 Kg (72,6 lbs)	76x41x75/42 Kg (92,4 lbs)	76x41x75/44 Kg (96,8 lbs)

PLUS

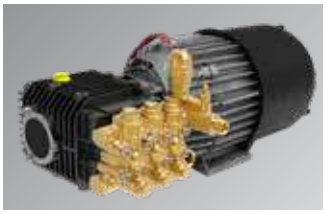

Professional motor pump with 4-pole motor (1400 rpm) and self-priming linear pump: the low rotation speed significantly extends the life of the components inside the motor pump, guaranteeing greater efficiency and silence

Pressure regulating valve to vary the power of the water jet according to actual requirements

Total stop delayed and in low voltage: the device delays the shutdown of the high pressure cleaner by 15 seconds from the last release of the gun lever, for safety, energy saving and prevention of faults or overheating of the motor pump

Integrated cleaning tank with a capacity of 2.8 litres for indirect suction of the chemical product

STANDARD EQUIPMENT

• 00080-01701 Gun M22 - 3/8 (mod. 1211/1509)	• 00080-01695 Gun M22 - 3/8 with rotating coupling (mod. 1713/2017)	• 00080-01724 Lance M22 high/low pressure	• 00080-03188 Nozzle type 045 (mod. 1211) • 00080-03185 Nozzle type 030 (mod. 1509) • 00080-03190 Nozzle type 055 (mod. 1713/2017)	• 00080-02347 High pressure hose 10 m (mod. 1713/2017) • 00080-02254 High pressure hose 8 m (mod. 1211/1509)

OPTIONAL

• 00080-03481 Turbo nozzle head	• 00080-02254 8 m High pressure hose - 3/8" M22 - Ø 1/4" - 210 bar (mod. 1211/1509)	• High pressure hose code: 00080-02258 10 m - 310 bar 00080-02261 20 m - 400 bar 00080-02262 20 m - 400 bar 00080-02263 10 m - 400 bar food industry	• Turbo Lance code: 00080-02966 - (mod. 1211/2017) 00080-02967 - (mod. 1713/2017) 00080-02986 - (mod. 1509)	• Sand-blasting lance code: 00080-02957 (mod. 1211) 00080-02958 (mod. 1713/2017)

HNR

T.S Total Stop 24V

Models:
1713 LP/2017 LP

T.S Total Stop

Model:
1509 LP

Ni NICKEL PLATING

CRANKSHAFT

RPM 1400

Models:
1713 LP/2017 LP

MORE INFO

CHARACTERISTICS

• 4 poles electrical motor (1400 rpm) with thermal protection and water cooling (mod. 1713 LP/2017 LP) • Three ceramic coated pistons (mod. 1509 LP). • Three full ceramic pistons (mod. 1713 LP/2017 LP). • Built-in by-pass valve nickel plating brass linear pump head with high temperature water seals and bushing. • Suction and delivery Stainless steel valves. • Low voltage and delayed Total Stop (mod. 1713 LP/2017 LP) • Detergent built-in tank for indirect suction (2,8 lt.). • Pressure regulator. • Glicerine pressure gauge. • Hose-reel.

TECHNICAL DATA

	HNR 1509 LP	HNR 1713 LP	HNR 2017 LP
code	36089-00013	36089-00014	36089-00015
rated/max pressure	150/160 bar - 2175/2320 psi	170/190 bar - 2465/2755 psi	200/230 bar - 2900/3335 psi
max delivery flow rate	540 l/h - 2.37 gpm	780 l/h - 3.43 gpm	1020 l/h - 4.4 gpm
abs. power/supply	3000 W/230V 1~50Hz	5200 W/400V 3~50Hz	7500 W/400V 3~50Hz
motor power	2,2 kW	4,0 kW	5,5 kW
pump model	MP3 Ni/1400 rpm	MPW3.5 Ni/1400 rpm	MPW3.5 Ni/1400 rpm
T max water inlet	40°C	40°C	40°C
dimension (cm)/weight	76x40x75/33 Kg (72,6 lbs)	76x40x75/42 Kg (92,4 lbs)	76x40x75/44 Kg (96,8 lbs)

PLUS

Professional motor pump with 4-pole motor (1400 rpm) and self-priming linear pump: the low rotation speed significantly extends the life of the components inside the motor pump, guaranteeing greater efficiency and silence

Pressure regulating valve to vary the power of the water jet according to actual requirements

Total stop delayed and in low voltage: the device delays the shutdown of the high pressure cleaner by 15 seconds from the last release of the gun lever, for safety, energy saving and prevention of faults or overheating of the motor pump

Integrated cleaning tank with a capacity of 2.8 litres for indirect suction of the chemical product

STANDARD EQUIPMENT

• 00080-01695 Gun M22 - 3/8 with rotating coupling	• 00080-01724 Lance M22 high/low pressure	• 00080-03190 Nozzle type 055 (mod. 1713/2017) • 00080-03185 Nozzle type 030 (mod. 1509)	• 00080-02258 High pressure hose 10 m (mod. 1509) • 00080-02259 High pressure hose 10 m (mod. 1713/2017)	

OPTIONAL

• 00080-03481 Turbo nozzle head	• High pressure hose code: 00080-02258 10 m - 310 bar 00080-02261 20 m - 400 bar 00080-02262 20 m - 400 bar 00080-02263 10 m - 400 bar food industry	• Turbo Lance code: 00080-02967 - (mod. 1713/2017) 00080-02986 - (mod. 1509)	• Sand-blasting lance code: 00080-02957 (mod. 1509) 00080-02958 (mod. 1713/2017)	

Tucson XL

T.S Total Stop 24V

CRANKSHAFT

RPM 1400

MORE INFO

CHARACTERISTICS

• 4 poles electrical motor (1400 rpm) with thermal protection and water cooling. • Three full ceramic pistons, brass linear pump head with by-pass valve. • Low voltage and delayed Total Stop. • Suction and delivery Stainless steel valves. • Detergent built-in tank for indirect suction (2,8 lt.). • Pressure regulator. • Glicerine pressure gauge. • Hose-reel.

TECHNICAL DATA

	Tucson XL 2015 LP	Tucson XL 2021 LP	Tucson XL 2515 LP
code	36090-00001	36090-00002	36090-00003
rated/max pressure	200/230 bar - 2900/3335 psi	200/230 bar - 2900/3335 psi	250/280 bar - 3600/4061 psi
max delivery flow rate	900 l/h - 3.96 gpm	1260 l/h - 5.55 gpm	900 l/h - 3.96 gpm
abs. power/supply	7000 W/400V 3~50Hz	9400 W/400V 3~50Hz	8500 W/400V 3~50Hz
motor power	5,5 kW	7,5 kW	7,5 kW
pump model	CL6/1400 rpm	CL6/1400 rpm	CL6/1400 rpm
T max water inlet	40°C	40°C	40°C
dimension (cm)/weight	61x40x91/69 Kg (152 lbs)	61x40x91/70 Kg (154 lbs)	61x40x91/70 Kg (154 lbs)

PLUS

New CL 6.0 self-priming pump with three pistons in integral ceramic, tapered roller bearings, double oil viewer and brass head

New flanged pressure regulating valve L3.1, internal passages resized to ensure correct operation even in high operating flow conditions

Total stop delayed and in low voltage: the device delays the shutdown of the high pressure cleaner by 15 seconds from the last release of the gun lever, for safety, energy saving and prevention of faults or overheating of the motor pump.

Integrated cleaning tank with a capacity of 2.8 litres for indirect suction of the chemical product

STANDARD EQUIPMENT

• 00080-01695 Gun M22 - 3/8 with rotating coupling	• 00080-01724 Lance M22 high/low pressure	• 00080-03188 Nozzle type 045 (mod. 2015) • 00080-03193 Nozzle type 070 (mod. 2021) • 00080-03187 Nozzle type 040 (mod. 2515)	• 00080-02259 High pressure hose 10 m	

OPTIONAL

• 00080-03481 Turbo nozzle head	• High pressure hose code: 00080-02258 10 m - 310 bar 00080-02261 20 m - 400 bar 00080-02262 20 m - 400 bar 00080-02263 10 m - 400 bar food industry	• Turbo Lance code: 00080-02966 - (mod. 2015/2515) 00080-02968 - (mod. 2021)	• Sand-blasting lance code: 00080-02957 (mod. 2015/2515) 00080-02959 (mod. 2021)	

HNR XL

T.S Total Stop 24V

CRANKSHAFT

RPM 1400

Ni NICKEL PLATING

MORE INFO

CHARACTERISTICS

• 4 poles electrical motor (1400 rpm) with thermal protection and water cooling. • Three full ceramic pistons, Nickel plating brass linear pump head with high temperature water seals and bushing. • Low voltage and delayed Total Stop. • Suction and delivery Stainless steel valves. • Detergent built-in tank for indirect suction (2,8 lt.). • Pressure regulator. • Glicerine pressure gauge.

TECHNICAL DATA

	HNR XL 2015 LP	HNR XL 2021 LP	HNR XL 2515 LP
code	36090-00008	36090-00009	36090-00010
rated/max pressure	200/230 bar - 2900/3335 psi	200/230 bar - 2900/3335 psi	250/280 bar - 3600/4061 psi
max delivery flow rate	900 l/h - 3.96 gpm	1260 l/h - 5.55 gpm	900 l/h - 3.96 gpm
abs. power/supply	7000 W/400V 3~50Hz	9400 W/400V 3~50Hz	8500 W/400V 3~50Hz
motor power	5,5 kW	7,5 kW	7,5 kW
pump model	CL6 Ni/1400 rpm	CL6 Ni/1400 rpm	CL6 Ni/1400 rpm
T max water inlet	40°C	40°C	40°C
dimension (cm)/weight	61x40x91/69 Kg (152 lbs)	61x40x91/70 Kg (154 lbs)	61x40x91/70 Kg (154 lbs)

PLUS

New CL 6.0 self-priming pump with three pistons in integral ceramic, tapered roller bearings, double oil viewer and brass head

New flanged pressure regulating valve L3.1, internal passages resized to ensure correct operation even in high operating flow conditions

Total stop delayed and in low voltage: the device delays the shutdown of the high pressure cleaner by 15 seconds from the last release of the gun lever, for safety, energy saving and prevention of faults or overheating of the motor pump

Integrated cleaning tank with a capacity of 2.8 litres for indirect suction of the chemical product

STANDARD EQUIPMENT

• 00080-01695 Gun M22 - 3/8 with rotating coupling	• 00080-01724 Lance M22 high/low pressure	• 00080-03188 Nozzle type 045 (mod. 2015) • 00080-03193 Nozzle type 070 (mod. 2021) • 00080-03187 Nozzle type 040 (mod. 2515)	• 00080-02347 High pressure hose 10 m	

OPTIONAL

• 00080-03481 Turbo nozzle head	• High pressure hose code: 00080-02258 10 m - 310 bar 00080-02261 20 m - 400 bar 00080-02262 20 m - 400 bar 00080-02263 10 m - 400 bar food industry	• Turbo Lance code: 00080-02966 - (mod. 2015/2515) 00080-02986 - (mod. 2021)	• Sand-blasting lance code: 00080-02957 (mod. 2015/2515) 00080-02959 (mod. 2021)	

Columbia-R

Model:
2015 LP

Model:
1211 LP

Model:
2015 LP

MORE INFO

CHARACTERISTICS

• 4 poles electrical motor (1400 rpm) with thermal protection and water cooling (3 ph model). • Three ceramic coated pistons (1 ph model), full ceramic pistons (3 ph model), brass linear pump head with built-in by-pass valve. • Low voltage and delayed Total Stop (3 ph model). • Suction and delivery Stainless steel valves. • Integrated detergent suction with external suction probe. • Pressure regulator. • Glicerine pressure gauge. • Hose reel **(optional)**. • Accessory holder. • Power cable holder. • Steel frame. • Steel cover.

TECHNICAL DATA

	Columbia R 1211 LP	Columbia R 2015 LP
code	36082-00154	36082-00155
rated/max pressure	120/150 bar - 1740/2175 psi	200/230 bar - 2900/3335 psi
max delivery flow rate	660 l/h - 2.91 gpm	900 l/h - 3.96 gpm
abs. power/supply	3000 W/230V 1~50Hz	7000 W/400V 3~50Hz
motor power	2,2 kW	5,5 kW
pump model	MP3/1400 rpm	CL3.5/1400 rpm
T max water inlet	40°C	40°C
dimension (cm)/weight	50x90x83/37 Kg (81 lbs)	50x90x83/51 Kg (112 lbs)

PLUS

Professional motor pump with 4-pole motor (1400 rpm) and self-priming linear pump: the low rotation speed significantly extends the life of the components inside the motor pump, guaranteeing greater efficiency and silence

Painted steel frame with support foot for stable positioning and ergonomic handle for easy movement

Sturdy protective steel cover to protect the motor pump against accidental impacts

Practical hose reel (optional) connected under pressure to use only the necessary length of hose and to rewind it easily after use

STANDARD EQUIPMENT

• 00080-01701 Gun M22 - 3/8 (mod. 1211).	• 00080-01695 Gun M22 - 3/8 with rotating coupling (mod. 2015).	• 00080-01724 Lance M22 high/low pressure	• 00080-03188 Nozzle type 045	• 00080-02347 High pressure hose 10 m (mod. 2015) • 00080-02254 High pressure hose 8 m (mod. 1211)

OPTIONAL

• 10001-10249 High-pressure hose reel (hose not included)	• 00080-02254 8 m High pressure hose - 3/8" M22 - Ø 1/4" - 210 bar (mod. 1211)	• High pressure hose code: 00080-02258 10 m - 310 bar 00080-02261 20 m - 400 bar 00080-02262 20 m - 400 bar 00080-02263 10 m - 400 bar food industry (mod. 2015)	• 00080-02966 Lance Turbo type 1 M22 - 0,45	• 00080-02957 Sandblasting lance

HCR

T.S Total Stop 24V

CRANKSHAFT

RPM 1400

Ni NICKEL PLATING

Models:
1515 LP/2015 LP
2021 LP/2515 LP

MORE INFO

CHARACTERISTICS

• 4 poles electrical motor (1400 rpm) with thermal protection and water cooling. • Three ceramic pistons, Nickel plating brass linear pump head (model 1515/2015/2021/2515) brass linear pump head (model 1211) with high temperature water seals and flanged valve and pressure regulator. • Suction and delivery Stainless steel valves. • Model 1211 with CL3.8 pump with Easy-Start system capable of facilitating engine starts even in the most severe working conditions. • Integrated elastic coupling, for better pump coupling (except model 1211) • Low voltage and delayed Total Stop • Integrated detergent suction with external suction probe. • Glicerine pressure gauge. • Hose reel **(optional)**. • Galvanized steel frame. • Stainless Steel covers.

TECHNICAL DATA

	HCR 1211 LP	HCR 1515 LP	HCR 2015 LP	HCR 2021 LP	HCR 2515 LP
code	36082-00170	36082-00137	36082-00138	36082-00139	36082-00140
rated/max pressure	120/150 bar - 1740/2175 psi	150/180 bar - 2175/2610 psi	200/230 bar - 2900/3335 psi	200/230 bar - 2900/3335 psi	250/280 bar - 3600/4061 psi
max delivery flow rate	660 l/h - 2.9 gpm	900 l/h - 3.96 gpm	900 l/h - 3.96 gpm	1260 l/h - 5.55 gpm	900 l/h - 3.96 gpm
abs. power/supply	3000 W/230V 1~50Hz	5000 W/400V 3~50Hz	7000 W/400V 3~50Hz	9400 W/400V 3~50Hz	8500 W/400V 3~50Hz
motor power	2,2 kW	4,0 kW	5,5 kW	7,5 kW	7,5 kW
pump model	CL3.8/1400 rpm	CL6 Ni/1400 rpm	CL6 Ni/1400 rpm	CL6 Ni/1400 rpm	CL6 Ni/1400 rpm
T max water inlet	40°C	40°C	40°C	40°C	40°C
dimension (cm)/weight	50x90x83/54 Kg (119 lbs)	50x90x83/54 Kg (119 lbs)	50x90x83/56 Kg (123 lbs)	50x90x83/58 Kg (128 lbs)	50x90x83/59 Kg (130 lbs)

PLUS

New CL3.8 and CL 6.0 self-priming pumps with three pistons in integral ceramic, double oil viewer and brass head. New flanged pressure regulating valve L3.1, internal passages resized to ensure correct operation even in high operating flow conditions

Model 1211 with CL3.8 pump with Easy-Start system capable of facilitating engine starts even in the most severe working conditions. Integrated elastic coupling, for better pump coupling (except model 1211)

Sturdy protective steel cover to protect the motor pump against accidental impacts

Practical hose reel (optional) connected under pressure to use only the necessary length of hose and to rewind it easily after use

STANDARD EQUIPMENT

• 00080-01695 Gun M22 - 3/8 with rotating coupling	• 00080-01724 Lance M22 high/low pressure	• 00080-03188 Nozzle type 045 (mod. 1211-2015) • 00080-03191 Nozzle type 060 (mod. 1515) • 00080-03193 Nozzle type 070 (mod. 2021) • 00080-03187 Nozzle type 040 (mod. 2515)	• 00080-02347 High pressure hose 10 m	

OPTIONAL

• 10001-10249 High-pressure hose reel (hose not included)	• 10001-10260 Foam System Device for dense foam production and spreading.	• High pressure hose code: 00080-02258 10 m - 310 bar 00080-02261 20 m - 400 bar 00080-02262 20 m - 400 bar 00080-02263 10 m - 400 bar food industry	• Turbo Lance code: 00080-02966 - (mod. 1211/2015/2515) 00080-02986 - (mod. 2021) 00080-02967 - (mod. 1515)	

KCR

T.S Total Stop 24V

CRANKSHAFT

RPM 1400

Ni NICKEL PLATING

MORE INFO

CHARACTERISTICS

• 4 poles electrical motor (1400 rpm) with thermal protection and water cooling. • Three ceramic pistons, Nickel plating brass linear pump head with high temperature water seals and bushing. • Integrated elastic joint, for best pump coupling • Low voltage and delayed Total Stop. • Suction and delivery Stainless steel valves. • Integrated detergent suction with external suction probe. • Pressure regulator. • Glicerine pressure gauge. • Galvanized steel frame. • Stainless Steel covers.

TECHNICAL DATA

	KCR 2015 LP	KCR 2021 LP	KCR 2515 LP
code	36092-00006	36092-00011	36092-00010
rated/max pressure	200/230 bar - 2900/3335 psi	200/230 bar - 2900/3335 psi	250/280 bar - 3600/4061 psi
max delivery flow rate	900 l/h - 3.96 gpm	1260 l/h - 5.55 gpm	900 l/h - 3.96 gpm
abs. power/supply	7000 W/400V-415 3~50Hz	9400 W/400V-415 3~50Hz	8500 W/400V 3~50Hz
motor power	5,5 kW	7,5 kW	7,5 kW
pump model	CL6 Ni/1400 rpm	CL6 Ni/1400 rpm	CL6 Ni/1400 rpm
T max water inlet	40°C	40°C	40°C
dimension (cm)/weight	50x90x83/56 Kg (123 lbs)	50x90x83/58 Kg (128 lbs)	50x90x83/59 Kg (130 lbs)

PLUS

New CL 6.0 self-priming pumps with three pistons in integral ceramic, double oil viewer and brass head. New flanged pressure regulating valve L3.1, internal passages resized to ensure correct operation even in high operating flow conditions

Integrated detergent tank with external probe for indirect suction of the chemical product

Painted steel handle adjustable via hinged joints, foldable to reduce dimensions and to improve portability

Sturdy stainless steel fairings for protection against accidental impacts

STANDARD EQUIPMENT

• 00080-01695 Gun M22 - 3/8 with rotating coupling	• 00080-01724 Lance M22 high/low pressure	• 00080-03188 Nozzle type 045 (mod. 2015) • 00080-03193 Nozzle type 070 (mod. 2021) • 00080-03187 Nozzle type 040 (mod. 2515)	• 00080-02347 High pressure hose 10 m	

OPTIONAL

• 00080-01529 Kit hose reel with hose R2-5/16" 15 m. included for KCR 2015/2515	• 00080-01524 Kit hose reel with hoseR2-3/8" 15 m. included for KCR 2021	• 00080-02966 Turbo Lance (2015/2515)	• 00080-02968 Turbo Lance (2021)	• 00080-02957 Sandblasting lance (2015/2515)
• 00080-02959 Sandblasting lance (2021)				

MCHP

T.S Total Stop 24V

Models: 1515 LP/2015 LP/2021 LP

CRANKSHAFT

RPM 1400

Models: 1515 LP/2015 LP 2021 LP

MORE INFO

CHARACTERISTICS

• 4 poles electrical motor (1400 rpm) with thermal protection and water cooling. • Three full ceramic pistons, brass linear pump head with built-in by-pass valve. • Integrated elastic joint, for best pump coupling. • Low voltage and delayed Total Stop. • Suction and delivery Stainless steel valves. • Detergent built-in tank for indirect suction. • Pressure regulator. Glicerine pressure gauge. • Pressure accumulator (only model 2021). • Wall mount support (optional code 10001-10216). • Galvanized steel frame. • Plastic covers models MCHPV.

TECHNICAL DATA

	MCHPV 1515 LP	MCHPV 2015 LP	MCHPV 2021 LP
code	36077-00002	36077-00003	36077-00004
rated/max pressure	150/180 bar - 2175/2610 psi	200/230 bar - 2900/3335 psi	200/210 bar - 2900/3045 psi
max delivery flow rate	900 l/h - 3.96 gpm	900 l/h - 3.96 gpm	1260 l/h - 5.55 gpm
abs. power/supply	5000 W/400V 3~50Hz	7000 W/400V 3~50Hz	9400 W/400V 3~50Hz
motor power	4,0 kW	5,5 kW	7,5 kW
pump model	CL6/1400 rpm	CL6/1400 rpm	CL6/1400 rpm
T max water inlet	40°C	40°C	40°C
dimension (cm)/weight	75x50x35/43 Kg (95 lbs)	75x50x35/46 Kg (101 lbs)	75x50x35/58 Kg (128 lbs)

PLUS

Stacking module structure, it adapts perfectly to any type of installation

Built-in elastic joint for better pump/ motor coupling

Wall Kits (optional) allows application to the wall for ease of use

Stainless steel versions for the food sector

Other available versions:
36077-00037 - MCHPX 1211 LP with stainless steel frame and fairings
36077-00038 - MCHPX 2015 LP with stainless steel frame and fairings

OPTIONAL

• 10001-10145 **For food industry**: 00080-01688 Gun + 00080-01717 S.S lance + 00080-02263 10mt Hose AP food + 00009-02100 Hose adapter + 00009-02101 Hose adapter /Gun

• 10001-10146 **For industry**: 00080-01695 Gun + 00080-01715 lance + 00080-02347 10mt Hose AP + 00009-02100 Hose adapter

• 00080-03285 - Nozzle 060 (mod. 1515)
• 00080-03283 - Nozzle 045 (mod. 2015)
• 00080-03287 - Nozzle 075 (mod. 2021)

• 10001-10216 - Brackets for wall mounting

• High pressure hose code:
00080-02258 10 m - 310 bar
00080-02261 20 m - 400 bar
00080-02264 10 m R2
00080-02262 20 m - 400 bar
00080-02263 10 m - 400 bar food industry

• Turbo Lance code:
00080-02966 - (mod. 1211/2015)
00080-02986 - (mod. 2021)
00080-02967 - (mod. 1515)

• Sand-blasting lance code:
00080-02957 (mod. 1211/2015)
00080-02958 (mod. 2021)

Indo E

T.S Total Stop 24V

CRANKSHAFT

RPM 1400

MORE INFO

CHARACTERISTICS

• 4 poles electrical motor 12-15 hp with thermal protection • **Motor-pump with flexible joint** • Heavy duty structure with stainless steel covers • High filtering capacity cartridge suction brass filter • RW Triplex Premium pumps • Pressure gauge with stainless steel casing • **Hot water seals 4-poles (1400 rpm)** motor well oversized and protected with paint. Ø 300 wheels with brake • Highly professional unloader valve with external bypass • Timed Total Stop • Low voltage control panel • Contactor • Thermal relay motor protection • Hose reel with 20 m hose can be mounted on request (mod. 2521/3518) • Practical and safe housing accessories

On request 60Hz version cod. 36019-00083 Indo 3518

TECHNICAL DATA

	Indo 2521 E LP	Indo 3518 E LP	Indo 2030 E LP
code	36019-00062	36019-00063	36019-00066
rated/max pressure	250/260 bar - 3626/3770 psi	350/360 bar - 5076/5221 psi	200/220 bar - 2900/3190 psi
max delivery flow rate	1290 l/h - 5.6 gpm	1110 l/h - 4.8 gpm	1860 l/h - 8.1 gpm
abs. power/supply	10000 W/400V 3~50Hz	11500 W/400V 3~50Hz	11500 W/400V 3~50Hz
motor power	7,5 kW	9,2 kW	11 kW
pump model	RW/1400 rpm	TW/1400 rpm	TW/1400 rpm
T max water inlet	85°C	85°C	85°C
dimension (cm)/weight	126x74x98/125 Kg (275,5 lbs)	126x74x98/130 Kg (286,5 lbs)	126x74x98/130 Kg (286,5 lbs)

PLUS

Widely oversized 4-pole industrial electric motor, protected from painting and equipped with elastic joint for better motor/pump coupling

RW/TW Premium self-priming three-piston pumps in integral ceramic, tapered roller bearings, double oil viewer and brass head

Sturdy painted steel frame with vertical lifting bar, practical side hooks for accessories and protective stainless steel covers to preserve the motor pump from accidental impacts

Automatic regulation valve with external by-pass and gradual pressure reset (Indo 3518)

Other available versions:
36019-00083 - Indo 3518 E 400V - 60 Hz

STANDARD EQUIPMENT

• 00080-01097 Gun ML 955 - M22 with quick coupling (mod. 2521-2030) • 00080-01098 Gun ML 955 - M24 with quick coupling (mod. 3518)	• 10002-04019 lance SF40 mecline M22 (mod.2521-2030) • 10002-04020 lance SF40 mecline M24 (mod.3518)	• 00080-01368 Nozzle type 040 (mod. 3518) • 00080-00359 Nozzle type 055 (mod. 2521) • 00080-03339 Nozzle type 2510 (mod. 2030)	• 10002-04109 High pressure hose 10 m (mod.2521/2030) • 10002-04110 High pressure hose 10 m (mod.3518)	

OPTIONAL

• Turbo lance code: 10002-04103 (mod. 2521) 10002-04104 (mod. 3518) 10002-14408 (mod. 2030)	• Pipe cleaning hose 25 m code: 00058-02983 (mod. 2521) 00058-00650 (mod.3518) 00058-00634 (mod. 2030)	• Extension hose 10 m code: 10002-04105 (mod. 2521/2030) 10002-04106 (mod. 3518)	• Sand-blasting lance 500 bar code: 10002-04107 (mod.2521/2030) 10002-04108 (mod. 3518)	• 00080-03925 Hose reel kit with 20m of hose included R2 3/8 280Bar (mod. 2521/2030) • 00080-03943 Hose reel kit with 20m of hose included R2 3/8 400Bar (mod. 3518) • 00080-03926 Hose reel kit without hose (mod. 2521/2030/3518)

Lena E

T.V Thermal Valve

CRANKSHAFT

RPM 1400

MORE INFO

CHARACTERISTICS

• Sturdy frame painted with anti-corrosive treatment • Stainless steel cover panels • **Low voltage (24V) control panel with start-delta system** • Handy lance and gun storage • High filtering capacity cartridge suction filter • Ø 300 industrial wheels with brake • Electric motor (1400 rpm) 20,25 and 30 hp • TW 500 Premium pumps /TW • Motor-pump coupling by means of a flexible joint • Automatic unloader valve with external bypass and gradual pressure restoring (on 5018 and 5021 models) • Overheating thermostatic valve • Low voltage (24V) start-up panel (star-delta) • Remote switch and motor cut-out with thermal relay • Emergency stop button • **Hour counter** • Hose reel with 20 mt hose can be mounted on request (cod. 00080-01521)

On request 60Hz version cod. 36019-00072 Lena 5015 cod. 36019-00075 Lena 5021

TECHNICAL DATA

	Lena 5015 E LP	Lena 5018 E LP	Lena 5021 E LP	Lena 2042 E LP
code	36019-00068	36019-00069	36019-00070	36019-00074
rated/max pressure	500/520 bar - 7252/7541 psi	500/520 bar - 7252/7541 psi	500/520 bar - 7252/7541 psi	200/215 bar - 2900/3118 psi
max delivery flow rate	990 l/h - 4.3 gpm	1110 l/h - 4.8 gpm	1260 l/h - 5.55 gpm	2520 l/h - 11.09 gpm
abs. power/supply	15000 W/380-415V 3~50Hz	19000 W/380-415V 3~50Hz	23000 W/380-415V 3~50Hz	18500 W/380-415V 3~50Hz
motor power	15 kW	18,5 kW	22 kW	18,5 kW
pump model	TW500/1400 rpm	TW500/1400 rpm	TW500/1400 rpm	TW/1400 rpm
T max water inlet	85°C	85°C	85°C	85°C
dimension (cm)/weight	118,5x74x100/215 Kg (473 lbs)	118,5x74x100/260 Kg (496 lbs)	118,5x74x100/285 Kg (507 lbs)	118,5x74x100/225 Kg (496 lbs)

PLUS

Widely oversized 4-pole industrial electric motor, protected from painting and equipped with elastic joint for better motor/pump coupling

TW Premium 500 self-priming three-piston pumps in integral ceramic, tapered roller bearings, double oil viewer and brass head

Sturdy painted steel frame with vertical lifting bar, practical side hooks for accessories and protective stainless steel covers to preserve the motor pump from accidental impacts

Automatic adjustment valve with external by-pass and gradual pressure reset (Lena 5021)

Other available versions:
36019-00072 - Lena 5015 E 400V - 60 Hz
36019-00075 - Lena 5021 E 400V - 60 Hz

STANDARD EQUIPMENT

• 00080-01099 Gun ML 960 with quick coupling M24-M24 (mod.5015/5018)	• 00080-03947 Gun ML955 M24 (mod. 2042)	• 00080-01100 Gun ML 710 with quick coupling M24-M24 (mod.5021)	• 10002-04021 Stainless steel Lance 500 bar L50 (mod.5015/5018/2042)	• 10002-04022 Stainless steel Lance 500 bar L70 (mod.5021)
• 00080-00355 Nozzle type 028 (mod. 5015) • 00080-00350 Nozzle type 035 (mod. 5018) • 00080-00317 Nozzle type 040 (mod. 5021) • 00080-03340 Nozzle type 12 (mod. 2042)	• 10002-04111 High pressure hose 10 m • 10002-04110 High pressure hose 10 m (mod. 2042)	• 00009-02403 Rotating coupling G3/8M - M24 AISI303		

OPTIONAL

• Turbo lance code: 10002-04094 (mod. 5015) 10002-04095 (mod. 5018) 10002-04096 (mod. 5021) 10002-03887 (mod. 2042)	• Pipe cleaning hose 25 m code: 00058-00648 (mod. 5015) 00058-00649 (mod. 5018/5021) 00058-00642 (mod. 2042)	• Extension hose 20 m. 10002-04098	• Sand-blasting lance 500 bar code: 10002-04100 (mod. 5015) 10002-04101 (mod. 5018/5021) 10002-03892 (mod. 2042)	• 00069-00223 Apron

Irtys E

T.V Thermal Valve

CRANKSHAFT

RPM 1400

MORE INFO

CHARACTERISTICS

• Sturdy frame painted with anti-corrosive treatment • Stainless steel cover panels • Handy lance and gun storage • High filtering capacity cartridge suction filter • Pneumatic wheels with steel hub and air chamber • Electric motor (1400 rpm) 30 hp • TW 700 triplex pump • Motor-pump coupling with flexible joint • Stainless steel pressure gauge • Automatic unloader valve with external bypass and gradual pressure relief • Safety valve • Overheating thermostatic valve • Low voltage (24V) start-up panel (star-delta) • Remote switch and motor cut-out with thermal relay • Emergency stop button • **Hour counter**

TECHNICAL DATA

	Irtys E LP
code	36019-00084
rated/max pressure	700/770 bar - 10152/11167 psi
max delivery flow rate	900 l/h - 3.96 gpm
abs. power/supply	22000 W/380-415V 3~50Hz
motor power	22 kW
pump model	TW700/1400 rpm
T max water inlet	85°C
dimension (cm)/weight	100x75x85/230 Kg (507 lbs)

PLUS

Widely oversized 4-pole industrial electric motor, protected from painting and equipped with elastic joint for better motor/pump coupling

TW Premium 700 pump with nickel-plated brass head and ceramic pistons

Sturdy painted steel frame with vertical lifting bar, practical side hooks for accessories and protective stainless steel covers to preserve the motor pump from accidental impacts

Standard 1000 bar accessories , oversized to ensure the highest level of safety for the operator

STANDARD EQUIPMENT

• 00080-03949 Gun ML1000 with lance	• 00080-04553 Nozzle type 020 700 bar	• 00042-00243 Safety sock for gun	• 00070-00710 Self-cleaning filter 1"G	• 00014-00520 High pressure hose with safety sock 20 m

OPTIONAL

• 00080-04623 Turbo nozzle	• 00080-01225 Sand blasting lance	• 00069-00250 Helmet kit + apron + hand protections + gaiters		

Thermic 5.1H

T.V Thermal Valve

GASOLINE

MORE INFO

CHARACTERISTICS

• Three ceramic coated pistons, brass axial pump head with built-in by-pass valve. • Suction and delivery Stainless steel valves. 5 hp **Honda** GP 160 unleaded gasoline engine. • Manual start • Integrated detergent suction with external suction probe. • Pressure regulator. • Glicerine pressure gauge. • Hose reel **(optional)**. • Suction hose with check valve **(optional)**. • Steel frame. • Hose holder. • 3,1 l gasoline tank.

TECHNICAL DATA

	Thermic 5.1H
code	36113-00077
rated/max pressure	160/180 bar - 2320/2610 psi
max delivery flow rate	570 l/h - 2.51 gpm
engine type	Honda GP 160
motor power	5 hp
pump model	BXD/3400 rpm
T max water inlet	40°C
dimension (cm)/weight	70x59x97/37 Kg (81 lbs)

PLUS

Linear self-priming pump with three ceramic coated pistons and brass head

Sturdy painted steel frame with rear wheels and anti-vibration front foot for stable positioning, handle with ergonomic handle for easy movement on any type of surface

Side support for lance and gun housing

Honda GP 160 petrol engine 5 hp

STANDARD EQUIPMENT

• 00080-01701 Gun M22 - 3/8.	• 00080-01724 Lance M22 high/low pressure	• 00080-03186 Nozzle type 035	• 00080-02254 High pressure hose 8 m	

OPTIONAL

• 10001-10200 High-pressure hose reel (hose not included)	• 10002-12275 Suction hose with check valve	• 00080-02254 8 m High pressure hose - 3/8" M22 - Ø 1/4" - 210 bar	• 00080-02261 20 m High pressure hose - 3/8" - Ø 5/16" - 400 bar	• 00080-02957 Sandblasting lance

Thermic 2W Lite 6L

T.V Thermal Valve

MORE INFO

CHARACTERISTICS

• Loncin G200F gasoline engine • Axial pump with three stainless steel pistons, brass head and integrated regulating valve with double seal • Low pressure detergent suction • Easily inspectable suction water filter • Thermostatic valve for overtemperature • Ø 260 pneumatic wheels • Heavy semi-professional use • Inflated wheels (air chamber)

TECHNICAL DATA

	Thermic 2W lite 6L
code	36001-00053
rated/max pressure	200/220 bar - 2900/3190 psi
max delivery flow rate	630 l/h - 2.7 gpm
engine type	Loncin G200F
motor power	6,5 hp
pump model	TPBH2/3400 rpm
T max water inlet	40°C
dimension (cm)/weight	55x67x80/28 Kg (61,7 lbs)

PLUS

Painted steel handle with hose holder, removable during transportation

Pressure regulating valve to vary the power of the water jet according to actual requirements

Axial pump with stainless steel pistons, brass head, double water seal

Sturdy painted steel frame with rear inner tube wheels and front anti-vibration foot for stable positioning, handle with ergonomic handle for easy movement on any type of surface

STANDARD EQUIPMENT

• 00080-01137 Gun M22	• 10002-03541 Lance M22 high/low pressure	• 10002-04760 Turbo lance	• 00080-00350 Ceramic nozzle 15° 035	• 36001-00053 High pressure hose R1 10 m

Thermic 6,5

T.V Thermal Valve

CRANKSHAFT

GASOLINE

MORE INFO

CHARACTERISTICS

• Three ceramic coated pistons, brass linear pump head with built-in by-pass valve. • Suction and delivery stainless steel valves. • Manual start • 6.5 hp unleaded gasoline engine. • Integrated detergent suction with external suction probe. • Glicerine pressure gauge. • Hose-reel **(optional)**. • Suction hose with check valve **(optional)**. • Steel frame. • Hose holder. • Nozzles holder. • 3,1 l gasoline tank.

TECHNICAL DATA

	Thermic 6,5
code	36113-00027
rated/max pressure	180/210 bar - 2610/3045 psi
max delivery flow rate	630 l/h - 2.53 gpm
engine type	Lifan
motor power	6,5 hp
pump model	MP4/3400 rpm
T max water inlet	40°C
dimension (cm)/weight	47x57x57/38,5 Kg (84,9 lbs)

PLUS

Linear self-priming pump with three ceramic pistons and brass head

Sturdy painted steel frame with rear wheels and anti-vibration front foot for stable positioning, handle with ergonomic handle for easy movement on any type of surface

Side support for lance and gun housing

Pneumatic wheels to dampen vibrations and to promote movement on any type of surface

STANDARD EQUIPMENT

• 00080-02517 Gun M22 - 1/4"	• 00080-02770 Lance M22 with nozzle-holder.	• 10002-12432 High pressure nozzle set	• 00080-02367 High pressure hose 10 m	• 00014-01565 Garden hose 2,5 m

OPTIONAL

• 10001-10200 High-pressure hose reel (hose not included)	• 10002-12275 Suction hose with check valve	• 00080-02264 10 m High pressure hose - 3/8" - Ø 3/8" R2	• 00080-02261 20 m High pressure hose - 3/8" - Ø 5/16" - 400 bar	

Thermic 9.1 L

T.V Thermal Valve

CRANKSHAFT

GASOLINE

MORE INFO

CHARACTERISTICS

• Three ceramic coated pistons, brass linear pump head with built-in by-pass valve • Suction and delivery stainless steel valves • Manual start • 8 hp unleaded gasoline engine. • By-pass with safety valve. • Integrated detergent suction with external suction probe. • Pressure regulator. • Suction hose with check valve **(optional)**. • Hose holder. • Nozzles holder. • 4 l gasoline tank.

TECHNICAL DATA

	Thermic 9.1 L
code	36113-00081
rated/max pressure	190/200 bar - 2755/2900 psi
max delivery flow rate	780 l/h - 3.4 gpm
engine type	Loncin
motor power	8 hp
pump model	TPBH5/3400 rpm
T max water inlet	40°C
dimension (cm)/weight	50x59x60/56 Kg (123 lbs)

PLUS

Linear self-priming pump with three ceramic pistons and brass head

Sturdy painted steel frame with rear wheels and anti-vibration front foot for stable positioning, handle with ergonomic handle for easy movement on any type of surface

Side support for lance and gun housing and nozzle holder base

Pneumatic wheels to dampen vibrations and to promote movement on any type of surface

STANDARD EQUIPMENT

• 00080-01701 Gun M22 - 3/8"	• 00080-02770 Lance M22 with nozzle-holder.	• 10002-12241 High pressure nozzle set	• 00080-02258 High pressure hose 10 m	

OPTIONAL

• 10002-12275 Suction hose with check valve	• High pressure hose code: 00080-02258 10 m - 310 bar 00080-02261 20 m - 400 bar 00080-02264 10 m R2	• 00080-02966 Lance Turbo type 1 M22 - 0,45	• 00080-02957 Sandblasting lance	

Thermic 2W

POWERED by HONDA
only model 9H/13 H

T.V Thermal Valve

CRANKSHAFT

GASOLINE

CHARACTERISTICS

• Honda GX and Loncin gasoline engines • Heavy duty pump, 3 ceramic pistons, brass pump head and built-in unloader valve • Unleaded gasoline engine 9 hp **Honda** GX 270 (Thermic 2W 9 H) • Unleaded gasoline engine 13 hp **Loncin** G 390F (Thermic 2W 13 L) • Unleaded gasoline engine 13 hp **Honda** GX 390 (Thermic 2W 13 H) • 5 litres detergent tank with filter and cap • Readily serviceable suction water filter • Oil-alert safety device for engine protection • Glicerine pressure gauge. • Ø 300 big pneumatic wheels; easy to handle also up and down steps and over uneven ground • stainless steel pump cover on request • Thermostatic valve

TECHNICAL DATA

	Thermic 2W 9 H	Thermic 2W 13 L	Thermic 2W 13 H
code	36021-00034	36021-00036	36021-00035
rated/max pressure	210/220 bar - 3045/3190 psi	290/310 bar - 4206/4496 psi	290/310 bar - 4206/4496 psi
max delivery flow rate	900 l/h - 3.96 gpm	900 l/h - 3.96 gpm	900 l/h - 3.96 gpm
engine type	Honda GX 270	Loncin G 390F	Honda GX 390
motor power	9 hp	13 hp	13 hp
pump model	CL 4.5/3400 rpm	CL 4.5/3400 rpm	CL 4.5/3400 rpm
T max water inlet	40°C	40°C	40°C
dimension (cm)/weight	85x58x105/48 Kg (105 lbs)	85x58x105/51 Kg (112 lbs)	85x58x105/51 Kg (112 lbs)

PLUS

Ergonomic handle in painted steel adjustable by means of hinged joints, foldable to reduce dimensions and to improve portability

Sturdy tubular frame in painted steel with anti-vibration front feet for stability, inflatable rear wheels with a diameter of 300 mm to facilitate movement on any type of surface.

Integrated detergent tank with external probe for indirect suction of the chemical product

Sturdy stainless steel fairing for protection against accidental impacts

STANDARD EQUIPMENT

• 00080-01040 Gun M22 - 3/8 with rotating coupling.	• 10002-04732 Lance M22 high/ low pressure	• 00080-03330 Nozzle type (Thermic 2W 9 H) • 00080-03329 Nozzle type (Thermic 2W 13 L) (Thermic 2W 13 H)	• 10002-03986 High pressure hose 10 m	

OPTIONAL

• Hose reel kit cod. 00080-01538 hose included (15 m)	• 10002-04737 Turbo lance (Thermic 2W 9 H)	• 10002-03704 Turbo lance (Thermic 2W 13 L) (Thermic 2W 13 H)	• 00080-02258 Extension hose 10 m	• 00014-00233 Extension hose R2 20 m + 00009-01792 Coupling
• 00080-02957 Sand blasting Lance				

Thermic 2W Lite 13L

MORE INFO

CHARACTERISTICS

• Loncin G390F gasoline engine • Axial pump with 3 ceramic pistons, brass head and integrated regulating valve • Low pressure detergent suction • Easily inspectable suction water filter • Oil-Alert safety device (lack of oil) for motor protection • Pressure gauge • Thermostatic valve for overtemperature • Ø 260 pneumatic wheels • Heavy semi-professional use

TECHNICAL DATA

	Thermic 2W lite 13L
code	36001-00052
rated/max pressure	290/310 bar - 4206/4496 psi
max delivery flow rate	900 l/h - 3.9 gpm
engine type	Loncin G390F
motor power	13 hp
pump model	CL4.5/3400 rpm
T max water inlet	40°C
dimension (cm)/weight	55x67x89/35 Kg (77 lbs)

PLUS

Painted steel handle with hose holder, removable during transportation

Pressure regulating valve to vary the power of the water jet according to actual requirements

Linear pump with three ceramic pistons, brass head and regulating valve

Pneumatic wheels to dampen vibrations and to promote movement on any type of surface

STANDARD EQUIPMENT

• 00080-01695 Gun M22	• 10002-04732 Lance M22 high/ low pressure	• 10002-03703 Lance Turbo 350 bar	• 00080-00350 Ceramic nozzle 15° 035	• 00014-00514 High pressure hose R2 10 m

LAVOR

Thermic 10.1 D

T.V Thermal Valve

CRANKSHAFT

MORE INFO

CHARACTERISTICS

• Three ceramic pistons, brass linear pump head with by-pass valve. • Gear box between engine and pump (1560 rpm) • By-pass with thermostatic valve. • Automatic rpm regulation. • Electrical start with engine functions control. • Yanmar L100V Diesel engine (air cooled) with integrated Diesel tank. • Integrated regolable detergent suction with external suction probe. • Pressure regulator. • Glicerine pressure gauge. • Suction hose with check valve **(optional)**. • Heavy duty steel frame. • Brass filter. • Pneumatic effect Ø 260 wheels with brake

TECHNICAL DATA

	Thermic 10.1 D 1621	Thermic 10.1 D 2016
code	36022-00030	36022-00029
rated/max pressure	160/180 bar - 2320/2610 psi	200/230 bar - 2900/3335 psi
max delivery flow rate	1260 l/h - 5.5 gpm	960 l/h - 4.2 gpm
engine type	Yanmar L100V	Yanmar L100V
motor power	9,3 hp	9,3 hp
pump model	CL6.0/1560 rpm	CL6.0/1560 rpm
T max water inlet	40°C	40°C
dimension (cm)/weight	95x68x95/124 Kg (231 lbs)	95x68x95/124 Kg (231 lbs)

PLUS

New CL 6.0 self-priming pump with three pistons in integral ceramic, double oil viewer and brass head. Speed reducer between motor and pump. New flanged pressure regulating valve L3.1, internal passages resized to ensure correct operation even in high operating flow conditions

4 twin pneumatic wheels to dampen vibrations and to promote movement on any type of surface, parking brake

Yanmar L100V diesel engine, electric start panel with control lights, automatic rev decelerator

Sturdy painted steel tubular frame, vertical lifting hook, removable handle during transportation, with accessory holder hook

STANDARD EQUIPMENT

• 00080-01695 Gun M22	• 10002-04732 Lance M22 high/ low pressure	• 00080-03341 Nozzle 075 (mod. 1621) • 00080-03247 Nozzle 050 (mod. 2016)	• 00014-00514 High pressure hose R2 10 m (mod. 2016) • 10002-04109 High pressure hose R2 10 m (mod.1621)	

OPTIONAL

• 10002-12275 Suction hose with check valve	• 10002-04739 Turbo lance 255 bar 050 (mod.2016)	• 10002-04741 Turbo lance 255 bar 070 (mod.1621)	• 00080-02958 Sand blasting lance	• 00080-01527 Kit hose reel with 15m R2 3/8" hose

Thermic 2W PRO

T.V Thermal Valve

CRANKSHAFT

GASOLINE

CHARACTERISTICS

• Gearbox reducer between engine and pump (1560 rpm) • Self-priming CL6.0 Lavor pump, 3 ceramic pistons, brass pump head and unloader valve flanged • Suction and delivery Stainless steel valves. • Unleaded gasoline engine 13 hp **Honda** GX 390 (Thermic 2W PRO 13 H) • Unleaded gasoline engine 13 hp **Loncin** G 390F (Thermic 2W PRO 13 L) • 5 litres detergent tank with filter and cap • Readily serviceable suction water filter • Oil-alert safety device for engine protection • Glicerine pressure gauge. • Folding handle with aluminium hinges • Ø 300 big pneumatic wheels; easy to handle also up and down steps and over uneven ground • Stainless steel pump cover on request

TECHNICAL DATA

	Thermic 2W PRO 13 L	Thermic 2W PRO 13 H
code	36021-00038	36021-00037
rated/max pressure	250/260 bar - 3625/3770 psi	250/260 bar - 3625/3770 psi
max delivery flow rate	1020 l/h - 4.4 gpm	1020 l/h - 4.4 gpm
engine type	Loncin G 390F	Honda GX 390
motor power	13 hp	13 hp
pump model	CL6.0/1560 rpm	CL6.0/1560 rpm
T max water inlet	40°C	40°C
dimension (cm)/weight	85x58x105/65 Kg (143 lbs)	85x58x105/65 Kg (143 lbs)

PLUS

New CL 6.0 self-priming pump with three pistons in integral ceramic, double oil viewer and brass head. Speed reducer between motor and pump. New flanged pressure regulating valve L3.1, internal passages resized to ensure correct operation even in high operating flow conditions

Ergonomic handle in painted steel adjustable by means of hinged joints, foldable to reduce dimensions and to improve portability

Robust tubular frame in painted steel with anti-vibration front feet for stability, inflatable rear wheels with a diameter of 300 mm to facilitate movement on any type of surface, stainless steel fairing.

Integrated detergent tank with external probe for indirect suction of the chemical product

STANDARD EQUIPMENT

• 00080-01695 Gun M22 - 3/8 with rotating coupling.	• 00080-01739 Lance M22 high/low pressure	• 00080-03329 Inox 350 bar nozzle type 037 inox	• 00014-00514 High pressure hose 10 m	

OPTIONAL

• 10002-12275 Suction hose with check valve	• Hose reel kit cod. 00080-01524 hose included (15 m)	• 10002-03408 Turbo lance 255 bar	• 00080-02258 Extension hose 10 m	• 00080-02262 Extension hose 20 m

Thermic 13 H

T.V Thermal Valve

CRANKSHAFT

GASOLINE

MORE INFO

CHARACTERISTICS

• Three ceramic pistons, brass linear pump head. • Gearbox reducer between engine and pump (1560 rpm) • Automatic rpm regulation. • By-pass with safety valve. • Suction and delivery Stainless steel valves. • Unleaded gasoline engine 13 hp **Honda** GX 390. • Integrated detergent suction with external suction probe. • Glicerine pressure gauge. • Heavy duty steel frame. • 6,5 l gasoline tank. • Suction hose with check valve (**optional** cod. 10002-12275).

TECHNICAL DATA

	Thermic 13 H
code	36113-00013
rated/max pressure	250/280 bar - 3625/4061 psi
max delivery flow rate	1080 l/h - 4.76 gpm
engine type	Honda GX 390
motor power	13 hp
pump model	CL6.0/1560 rpm
T max water inlet	40°C
dimension (cm)/weight	100x66x92/61 Kg (134 lbs)

PLUS

Honda GX 390 – 13hp petrol engine with automatic decelerator

New CL 6.0 self-priming pump with three pistons in integral ceramic, double oil viewer and brass head. Speed reducer between motor and pump. New flanged pressure regulating valve L3.1, internal passages resized to ensure correct operation even in high operating flow conditions

Sturdy painted steel frame with side support for lance and gun housing

4 twin wheels for stable positioning and ease of movement

STANDARD EQUIPMENT

• 00080-01695 Gun M22 - 3/8 with rotating coupling	• 00080-01724 Lance M22 high/low pressure	• 00080-03189 Nozzle type 050	• 00080-02347 High pressure hose 10 m	

OPTIONAL

• Protective frame with lifting hooking (optional cod. 00071-03396)	• Hose reel optional cod. 10001-10245 (hose not included) in combination with protective frame.	• High pressure hose code: 00080-02258 10 m - 310 bar 00080-02261 20 m - 400 bar 00080-02262 20 m - 400 bar 00080-02263 10 m - 400 bar food industry	• 00080-02966 Lance Turbo type 1 M22 - 0,45	• 00080-02958 Sand blasting lance

Thermic 13 HF

T.V Thermal Valve

CRANKSHAFT

GASOLINE

POWERED by HONDA

SELF PRIMING PUMP

MORE INFO

CHARACTERISTICS

• Three ceramic pistons, brass linear pump head. • 1560 rpm reducer between engine and pump. • Automatic rpm regulation. • By-pass with safety valve. • Suction and delivery Stainless steel valves. • Unleaded gasoline engine 13 hp **Honda** GX 390. • Integrated detergent suction with external suction probe. • Pressure regulator. • Glicerine pressure gauge. • Heavy duty steel frame. • 6,5 l gasoline tank. • Suction hose with check valve (**optional** cod. 10002-12275).

TECHNICAL DATA

	Thermic 13 HF
code	36113-00035
rated/max pressure	250/280 bar - 3625/4061 psi
max delivery flow rate	1080 l/h - 4.76 gpm
engine type	Honda GX 390
motor power	13 hp
pump model	CL6.0/1560 rpm
T max water inlet	40°C
dimension (cm)/weight	100x66x92/65 Kg (143 lbs)

PLUS

Honda GX 390 – 13hp petrol engine with automatic decelerator

New CL 6.0 self-priming pump with three pistons in integral ceramic, double oil viewer and brass head. Speed reducer between motor and pump. New flanged pressure regulating valve L3.1, internal passages resized to ensure correct operation even in high operating flow conditions

Robust tubular frame in painted steel with side support for lance and gun housing

4 twin wheels for stable positioning and ease of movement

STANDARD EQUIPMENT

• 00080-01695 Gun M22 - 3/8 with rotating coupling	• 00080-01724 Lance M22 high/low pressure	• 00080-02966 Turbo lance M22	• 00080-03189 Nozzle type 050 • 00080-04626 Rotating nozzle type 045	• 00080-02347 High pressure hose 10 m

OPTIONAL

• Hose reel optional cod. 10001-10245 (hose not included) in combination with protective frame.	• High pressure hose code: 00080-02258 10 m - 310 bar 00080-02261 20 m - 400 bar 00080-02262 20 m - 400 bar 00080-02263 10 m - 400 bar food industry	• 00080-02966 Lance Turbo type 1 M22 - 0,45	• 00080-02958 Sand blasting lance

Thermic 18 BS/22 H

POWERED by HONDA
Only Thermic 22 H

SELF PRIMING PUMP

model 3521

PRESSURE 280-500 bar

T.V Thermal Valve

CRANKSHAFT

GASOLINE

MORE INFO
18BS

MORE INFO
22H

CHARACTERISTICS

• TW Premium/TW 500 bar Premium pumps with brass pump head and ceramic pistons • Briggs & Stratton Vanguard (Thermic 18 BS)/Honda engine GX 690 (Thermic 22 H) • Gearbox (with 1560 rpm pump) • Electrical starting • Ø 300 industrial wheels with brake • No engine-oil safety device (oil-alert) • **Hour counter** • Automatic decelerator to reduce the number of revs in the bypass phase • Stainless steel gradual pressure restoration valve with EASY-START • Thermostatic valve • Water filter, readily serviceable cartridge type • Water suction from external tank option (self priming pumps only TW) • Hose reel with 20 mt hose can be mounted on request (cod. 00080-01521)

TECHNICAL DATA

	Thermic 18 3518 BS	Thermic 22 3521 H	Thermic 22 4018 H	Thermic 22 5015 H	Thermic 22 2730 H
code	36018-00043	36018-00042	36018-00041	36018-00040	36018-00045
rated/max pressure	350/360 bar - 5076/5221 psi	350/360 bar - 5076/5221 psi	400/415 bar - 5801/6019 psi	500/520 bar - 7252/7541 psi	270/280 bar - 3916/4061 psi
max delivery flow rate	1080 l/h - 4.76 gpm	1320 l/h - 5.8 gpm	1110 l/h - 4.8 gpm	990 l/h - 4.3 gpm	1800 l/h - 7.92 gpm
engine type	B&S Vanguard	Honda GX 690/22	Honda GX 690/22	Honda GX 690/22	Honda GX 690/22
motor power	18 hp	22 hp	22 hp	22 hp	22 hp
pump model	TW/1560 rpm	TW/1560 rpm	TW 500/1560 rpm	TW 500/1560 rpm	TW/1560 rpm
T max water inlet	85°C	85°C	85°C	85°C	85°C
dimension (cm)/weight	118,5x74x102/150 Kg (330 lbs)	118,5x74x102/180 Kg (397 lbs)	118,5x74x102/180 Kg (397 lbs)	118,5x74x102/180 Kg (397 lbs)	118,5x74x102/180 Kg (397 lbs)

PLUS

Sturdy painted steel frame with vertical lifting bar, practical side hooks for accessories and protective stainless steel covers to preserve the motor pump from accidental impacts

Vanguard 18hp / Honda 22hp two-cylinder petrol engines with electric starter, automatic decelerator and 20-litre fuel tank

TW Premium / TW 500 pump with brass head and ceramic pistons

Foamed pneumatic wheels in solid rubber and 300 mm diameter steel rims for positioning stability and for movement operations

STANDARD EQUIPMENT

• 00080-01098 Gun ML 955 - M24 with quick coupling (mod. Thermic 18 BS)	• 00080-01100 Gun ML 710 with quick coupling M24-M24 (mod. Thermic 22H)	• 10002-04020 lance SF40 M24 (Thermic 18 BS)	• 10002-04022 Stainless steel Lance 500 bar L70 (mod. Thermic 22H)	• 00080-01368 Nozzle 040 (mod. 3518 BS) • 00080-00319 Nozzle 050 (mod. 3521 H) • 00080-00317 Nozzle 040 (mod. 4018 H)
• 00080-00355 Nozzle 028 (mod. 5015 H) • 00080-03341 Nozzle 075 (mod. 2730 H)	• 10002-04110 High pressure hose10 m (Thermic 18 BS) • 10002-04111 High pressure hose 10 m (Thermic 22H)	• 00009-02403 Rotating coupling		

OPTIONAL

• Turbo lance code: 10002-04104 (mod.3518) 10002-04097 (mod.3521) 10002-04096 (mod.4018) 10002-04094 (mod.5015) 10002-03885 (mod.2730)	• Pipe cleaning hose 25 m. code: 00058-00650 (mod.3518) 00058-00649 (mod.3521/4018) 00058-00648 (mod.5015) 00058-00642 (mod.2730)	• Extension hose code: 10002-04106 (mod.3518) 10 m. 10002-04099 (mod.3521/2730) 20 m. 10002-04098 (mod.4018/5015) 20 m.	• Sand-blasting lance 500 bar code: 10002-04108 (mod.3518) 10002-04102 (mod.3521) 10002-04101 (mod.4018) 10002-04100 (mod.5015) 10002-03892 (mod.2730)	• 00069-00223 Apron

Thermic 26 K

T.V Thermal Valve

CRANKSHAFT

DIESEL

Powered by
KOHLER DIESEL

SELF PRIMING PUMP

model 3523

PRESSURE 350-500 bar

MORE INFO

CHARACTERISTICS

• TW Premium/TW 500 bar Premium pumps with brass pump head and ceramic pistons • Kohler engine KDW1003 liquid cooler • Gearbox (with 1450 rpm) • Electrical starting • No engine-oil safety device (oil-alert) • **Hour counter** • Manual accelerator • Stainless steel gradual pressure restoration valve with EASY-START • Thermostatic valve • Water filter, readily serviceable cartridge type • Water suction from external tank option (self priming pumps only TW) • Ø 350 industrial wheels • Hose reel with 20 mt hose can be mounted (00080-01539)

TECHNICAL DATA

	Thermic 26 3523 K	Thermic 26 4020 K	Thermic 26 5016 K
code	36018-00048	36018-00047	36018-00046
rated/max pressure	350/360 bar - 5076/5221 psi	400/415 bar - 5801/6019 psi	500/520 bar - 7252/7541 psi
max delivery flow rate	1380 l/h - 6.07 gpm	1200 l/h - 5.28 gpm	990 l/h - 4.3 gpm
engine type	Kohler 1003 Diesel	Kohler 1003 Diesel	Kohler 1003 Diesel
motor power	23,7 hp	23,7 hp	23,7 hp
pump model	TW 500/1450 rpm	TW 500/1450 rpm	TW 500/1450 rpm
T max water inlet	85°C	85°C	85°C
dimension (cm)/weight	137x85x102/300 Kg (661 lbs)	137x85x102/300 Kg (661 lbs)	137x85x102/300 Kg (661 lbs)

PLUS

Industrial pneumatic wheels in solid rubber and steel rims with a diameter of 350 mm for stability of positioning and for movement operations

Sturdy painted steel frame with vertical lifting bar, practical side hooks for accessories and protective stainless steel covers to preserve the motor pump from accidental impacts

Kohler KDW 1003 water-cooled engine, 3 cylinders in line to minimise vibrations

TW Premium / TW 500 pump with brass head and ceramic pistons

STANDARD EQUIPMENT

• 00080-01100 Gun ML 710 with quick coupling M24-M24	• 00080-01738 Lance with ventilated protection	• 00080-03328 Nozzle 043 (mod. 4020) • 00080-03272 Nozzle 030 (mod. 5016/3523)	• 10002-03954 High pressure hose 10 m	• 00009-02403 Rotating coupling

OPTIONAL

• Turbo lance with nozzle 600 bar code: 10002-04097 (mod.3523) 10002-04150 (mod.4020) 10002-04094 (mod.5016)	• Pipe cleaning hose 25 m. code: 00058-00649 (mod.3523/4020) 00058-00648 (mod.5016)	• Extension hose 20 m. code: 10002-04099 (mod.3523) 10002-04098 (mod.4020/5016)	• Sand-blasting lance 500 bar code: 10002-04102 (mod.3523) 10002-04101 (mod.4020) 10002-04100 (mod.5016)	• 00069-00223 Apron • 00069-00250 Helmet kit + apron + hand protections + gaiters

Thermic 31 7015 BS

T.V Thermal Valve

CRANKSHAFT

GASOLINE

MORE INFO

CHARACTERISTICS

• ø 300 mm 4 wheels with foamed-acting pneumatic • 31 HP B&S Vanguard engines • TW 700 triplex pump • Gearbox (with 1560 rpm pump) • Electrical starting • RPM manual regulator • Stainless steel gradual pressure relief valve with EASY START • Stainless steel pressure gauge • Safety valve • Thermostatic valve • Big water filter at pump inlet, readily serviceable cartridge type • Suitable for high professional use

TECHNICAL DATA

	Thermic 31 7015 BS
code	36018-00062
rated/max pressure	700/770 bar - 10152/11167 psi
max delivery flow rate	900 l/h - 3.96 gpm
engine type	B&S vanguard
motor power	31 hp
pump model	TW 700/1560 rpm
T max water inlet	85°C
dimension (cm)/weight	100x82x85/300 Kg (661 lbs)

PLUS

Standard 1000 bar accessories , oversized to ensure the highest level of safety for the operator

Sturdy painted steel frame with vertical lifting bar, practical side hooks for accessories and protective stainless steel covers to preserve the motor pump from accidental impacts

TW Premium 700 pump with nickel-plated brass head and ceramic pistons

Foamed pneumatic wheels in solid rubber and 300 mm diameter steel rims for positioning stability and for movement operations

STANDARD EQUIPMENT

• 00080-03949 Gun ML1000 with lance	• 00080-04553 Nozzle type 020 700 bar	• 00042-00243 Safety sock for gun	• 00070-00710 Self-cleaning filter 1"G	• 00014-00520 High pressure hose with safety sock 20 m

OPTIONAL

• 00080-04623 Turbo nozzle	• 00080-01225 Sand blasting lance	• 00069-00250 Helmet kit + apron + hand protections + gaiters		

Thermic 26 7013 K

Powered by
KOHLER
DIESEL

T.V Thermal Valve

CRANKSHAFT

DIESEL

PRESSURE
700 bar

MORE INFO

CHARACTERISTICS

• 4 twin solid wheels 350mm diameter • Kohler KDW1003 Diesel liquid cooled engine (23,7 hp) • TW 700 triplex pumps • Gearbox (with 1450 rpm) • Electrical starting • Hours meter • RPM manual regulator • Stainless steel gradual pressure relief valve with EASY START • Stainless steel pressure gauge • Safety valve • Thermostatic valve • Big water filter at pump inlet, readily serviceable cartridge type • Suitable for high professional use

TECHNICAL DATA

	Thermic 26 7013 K
code	36018-00063
rated/max pressure	700/770 bar - 10152/11167 psi
max delivery flow rate	780 l/h - 3.43 gpm
engine type	Kohler KDW1003 Diesel
motor power	23,7 hp
pump model	TW 700/1450 rpm
T max water inlet	85°C
dimension (cm)/weight	137x85x102/300 Kg (661 lbs)

PLUS

Standard 1000 bar accessories , oversized to ensure the highest level of safety for the operator

Sturdy painted steel frame with vertical lifting bar, practical side hooks for accessories and protective stainless steel covers to preserve the motor pump from accidental impacts

Kohler KDW 1003 water-cooled engine, 3 cylinders in line to minimise vibrations

TW Premium 700 pump with nickel-plated brass head and ceramic pistons

STANDARD EQUIPMENT

• 00080-03949 Gun ML1000 with lance	• 00080-04552 Nozzle type 025 700 bar	• 00042-00243 Safety sock for gun	• 00070-00710 Self-cleaning filter 1"G	• 00014-00520 High pressure hose with safety sock 20 m

OPTIONAL

• 00080-04622 Turbo nozzle + 10001-02143 Turbo Nozzle Adapter Kit	• 00080-01226 Sand blasting lance	• 00069-00250 Helmet kit + apron + hand protections + gaiters		

The hot water high-pressure cleaner is the best tool for tough or non water-soluble dirt removal.
Suitable for different uses and ideal in several sectors like agriculture, food industry and primary and secondary building.

Excellent for machines washing like: tools, engines, farm tractors and means of transport (oily dirt); removal or animal and vegetable residuals (stables and food industry), washing of heavy building equipments (cement mixers, cranes, earth-moving equipments etc.). In the food industry has a perfect hygienising effect.

Why a hot water high-pressure cleaner?

It is necessary the use of a hot water high-pressure cleaner whenever it is necessary to degrease oily or particularly tough dirt in the shortest time possible. Washing efficiency of hot water is much higher that the cold water one (up to 50% higher on some kind of dirt), because heat assists dirt degrease.
Heat effect on the surface produce also fast drying.
With the use of a hot water high-pressure cleaner it is possible to have: shorter washing time (under the same kind of dirt), better degrease of non water-soluble dirt , shorter drying time and less quantity of chemical product used: in few words, lower cleaning fixed costs and water saving.

The boiler

It is a diesel fuel heater that raises water temperature coming out of the pump; the difference between inlet and outlet water temperature is technically indicated like DeltaT.
Boiler dimensions, in other words coil and diesel fuel consumption, determine the thermal power of the burner.
Under the same conditions, increasing the delivery rate (quantity of water to be heated) the Delta T decreases proportionally. It is easy to understand why high pressure cleaners with higher delivery rates have more powerful burners: to grant the best operating temperature in each working condition. All our boilers have very high thermal efficiency, near 90% or higher. This means very low operating cost with reference to diesel fuel consumption.

• Linear pump:
The movement of the (3) pistons occurs through a system of connecting rods and crankshaft. The longitudinal axle of the pistons (placed at the same level or linear) is perpendicular to the motor rotation axle. It is more versatile to bear high delivery rates (from 21 l/min) and it has a better self priming.

• Water cooled motor:
Water flows through the Stainless steel coil around the motor, this allows a better thermal exchange (and so a cooling) than air also in those countries where inlet water could reaches 60°C. This allows a drop in operating temperature of the motor and pump mechanical elements, granting a better reliability and longer life.

• Thermal valve:
When the gun trigger is released, the same water flows through the pump (by-pass) and it overheats and sooner or later this damages the valve seals. With this completely mechanical system, the thermal valve checks the temperature in the pump, opening/closing the by-pass circuit letting new and fresh water flow inside before the elements are damaged. Simple solution without electronic devices.

• Total Stop:
Releasing the gun trigger the pump stops automatically avoiding element damages during the by-pass phase. Pulling the trigger, the high-pressure cleaner starts automatically. Max pump protection.

• Low voltage and delayed Total Stop:
To avoid quick and multiple start and shut down of the motor/pump group whenever the gun trigger is pulled and released, this disposal delays of about 15 seconds the machine shut down. Prevention, energy saving, top safety and pump longer life.

• Low voltage and delayed Total Stop with intelligent shut down: To avoid quick and multiple start and shut down of the motor/pump group whenever the gun trigger is pulled and released, this disposal delays of about 15 seconds the machine shut down. In case the machine is unused for more than 20 minutes or there are leakages in the pressure circuit, the machine shuts down automatically and completely: control panel power cut-off. Prevention, energy saving, top safety and pump longer life.

• Motor low rotation speed:
The electric motor transfers the same number of revolutions to the pump. With a 4 poles motor there is a lower rotation speed of the components (1400 RPM in case of 50Hz or 1750 RPM in case of 60 Hz) granting longer pump life. Extending lifetime solution.

• Pump with nickel-plated brass head:
The nickel-plating treatment improves the basic features (greater hardness and improved resistance to the chemical products used in washing), reducing the deterioration caused by cavitation.

Technical information

Code	Model	pag	operating pressure (max pressure) bar	operating pressure (max pressure) psi	delivery rate l/h	delivery rate GPM usa	absorbed power W	rpm RPM	voltage V	outlet temp. °C	fuel consumption l/h - gal/h	diesel tank l - gal	antiscale tank l - gal	heat output kW	packaging cm	packaging weight Kg - lbs
36093-00001	DARWIN 1310 XP	90	30÷130(150)	435÷1885(2175)	345÷600	1.52-2.64	3000	2800	230~50	max 90°	-	-	-	20	80x55x100	80 - 176
36093-00002	DARWIN PLUS 1310 XP	90	30÷130(150)	435÷1885(2175)	345÷600	1.52-2.64	3000	2800	230~50	max 90°	-	-	-	20	80x55x100	82 - 180
36093-00017	DARWIN PRO 1310 LP	92	30÷135(150)	435÷1958(2175)	345÷600	1.52-2.64	3000	2800	230~50	max 90°	-	-	-	20	80x55x100	80 - 176
36093-00018	DARWIN PRO 1310 LP	92	30÷135(150)	435÷1958(2175)	345÷600	1.52-2.64	3000	2800	230~50	max 90°	-	-	-	20	80x55x100	82 - 180
36079-00010	DAKOTA R2 1310 XP	94	30÷110(130)	435÷1595(1885)	330÷600	1.45÷2.64	3000	2800	230~50	max 110°	3,78 - 1.0	16 - 4.2	-	40	69x85x111	100 - 220
36071-00001	NPX 1211 XP	96	30÷120(150)	435÷1740(2175)	330÷660	1.45÷2.91	3200	2800	230~50	max 110°	4,72 - 1.25	18 - 4.8	-	58	71x113x111	118 - 260
36071-00017	NPX 1813 XP	96	30÷180(210)	435÷2610(3045)	400÷780	1.76÷3.43	6300	2800	400~50	max 110°	4,72 - 1.25	18 - 4.8	-	58	71x113x111	117.5 - 259
36079-00007	TEXAS R2 1211 LP	98	30÷110(135)	435÷1595(1958)	330÷660	1.45÷2.91	3000	1400	230~50	max 110°	3,78 - 1.0	16 - 4.2	-	30	69x85x111	112 - 246
36079-00008	TEXAS R2 1509 LP	98	30÷140(170)	435÷2030(2465)	400÷540	1.76÷2.3	3000	1400	230~50	max 110°	3,78 - 1.0	16 - 4.2	-	30	69x85x111	112 - 246
36079-00009	TEXAS R2 1811 LP	98	30÷180(210)	435÷2610(3045)	400÷660	1.76÷2.91	3000	1400	400~50	max 110°	3,78 - 1.0	16 - 4.2	-	30	69x85x111	112 - 246
36072-00167	LKX 1310 LP	100	30÷110(150)	435÷1595(2175)	330÷660	1.45÷2.91	3000	1400	230~50	max 110°	4,72 - 1,25	18 - 4.8	-	58	71x113x111	130.5 - 287
36072-00159	LKX 1515 LP	102	30÷150(180)	435÷2175(2610)	450÷900	1.98÷3.96	5500	1400	400~50	max 110°	5,6 - 1.5	18 - 4.8	-	74	71x113x111	143.4 - 316
36072-00160	LKX 2015 LP	102	30÷200(230)	435÷2900(3335)	450÷900	1.98÷3.96	7300	1400	400~50	max 110°	5,6 - 1.5	18 - 4.8	-	74	71x113x111	146 - 322
36072-00179	HLR 1211 LP	104	30÷110(150)	435÷1595(2175)	345÷660	1.52-2.91	3000	1400	230~50	max 110°	4,72 - 1,25	18 - 4.8	-	58	71x113x111	127 - 279
36072-00180	HLR 1510 LP	104	30÷150(180)	435÷2175(2610)	345÷600	1.52-2.64	3000	1400	230~50	max 110°	4,72 - 1,25	18 - 4.8	-	58	71x113x111	127 - 279
36072-00181	HLR 1614 LP	106	30÷160(190)	435-2320(2755)	345÷840	1.52-3.70	4200	1400	400~50	max 110°	4,72	18 - 4,7	-	58	71x113x111	148,5 - 327
36072-00100	HLR 1515 LP	106	30÷150(180)	435÷2175(2610)	345÷900	1.52.-3.96	5500	1400	400~50	max 110°	5,6 - 1.5	18 - 4,7	-	74	113x71x111	148,5 - 327
36072-00101	HLR 2015 LP	106	30÷200(230)	435÷2900(3335)	450÷900	1.98-3.96	7300	1400	400~50	max 110°	5,6 - 1.5	18 - 4,7	-	74	113x71x111	148,5 - 327
36072-00102	HLR 2021 LP	106	30÷200(230)	435÷2900(3335)	630÷1260	2.77-5.55	9700	1400	400~50	max 110°	5,6 - 1.5	18 - 4,7	-	74	113x71x111	148,5 - 327
36073-00002	TEKNA 2015 LP	108	30÷200(230)	435÷2900(3335)	450÷900	1.98÷3.96	7300	1400	400~50	max 110°	4,72 - 1.25	22 - 5.8	2,4 - 0.6	58	130x78x111	172 - 379
36073-00021	TEKNA 2021 LP	108	30÷200(230)	435÷2900(3335)	630÷1260	2.77÷5.55	9700	1400	400~50	max 110°	6,6 - 1,75	22 - 5.8	2,4 - 0.6	88	130x78x111	180 - 396
36074-00040	HTR 2015 LP	110	30÷200(230)	435÷2900(3335)	450÷900	1.98÷3.96	7300	1400	400~50	max 110°	6,6 - 1,75	22 - 5,8	2.4	88	130x78x111	187 - 412
36074-00041	HTR 2021 LP	110	30÷200(230)	435÷2900(3335)	630÷1260	2.77÷5.55	9700	1400	400~50	max 110°	6,6 - 1,75	22 - 5,8	2.4	88	130x78x111	181,5 - 400
36074-00052	HTR 2515 LP	110	30÷250(280)	435-3600(4061)	450÷900	1.98÷3.96	8800	1400	400~50	max 110°	6,6 - 1,75	22 - 5,8	2.4	88	130x78x111	187 - 412
36034-00015	HMR 2015 LP	112	30÷190(200)	435÷2755(2900)	450÷900	1.98÷3.96	6000	1400	400~50	max 110°	-	-	-	55	90x65x87	160 - 352

Code	Model	pag	operating pressure (max pressure) bar	operating pressure (max pressure) psi	delivery rate l/h	delivery rate GPM usa	absorbed power W	rpm RPM	voltage V	outlet temp. °C	fuel consumption l/h - gal/h	diesel tank l - gal	antiscale tank l - gal	heat output kW	packaging cm	packaging weight Kg - lbs
36034-00016	HMR 1521 LP	112	30÷150(160)	435÷2175(2320)	630÷1260	2.77÷5.55	6000	1400	400~50	max 110°	-	-	-	55	90x65x87	160 - 352
36034-00017	HMR 2021 LP	112	30÷190(200)	435÷2755(2900)	630÷1260	2.77÷5.55	9700	1400	400~50	max 110°	-	-	-	55	90x65x87	160 - 352
36137-00004	KANSAS 2.0 1510 LP	114	30÷150(180)	435÷2175(2610)	345÷600	1.52÷2.6	21000	1400	400~50	max 85°	-	-	22 - 5,8	18	130x78x111	150 - 330
36137-00005	KANSAS 2.0 1512 LP	114	30÷150(180)	435÷2175(2610)	345÷720	1.52÷3.1	28000	1400	400~50	max 85°	-	-	22 - 5,8	24	130x78x111	150 - 330
36137-00006	KANSAS 2.0 1710 LP	114	30÷170(190)	435÷2465(2775)	345÷600	1.52÷2.6	28000	1400	400~50	max 85°	-	-	22 - 5,8	24	130x78x111	150 - 330
36137-00007	KANSAS 2.0 1912 LP	114	30÷190(210)	435÷2755(3045)	345÷720	1.52÷3.1	41000	1400	400~50	max 85°	-	-	22 - 5,8	36	130x78x111	150 - 330
36075-00046	HHPV 1212 LP	116	30÷100(110)	435÷1450(1595)	345÷720	1.52÷2.9	3000	1400	230 - 50	max 110°	4,72 - 1.25	20 - 5.3	2,5 - 0,6	58	80x120x185	199 - 438
36075-00044	HHPV 2015 LP	116	30÷200(230)	435÷2900(3335)	450÷900	1.98÷3.96	7300	1400	400 - 50	max 110°	4,72 - 1.25	20 - 5.3	2,5 - 0,6	58	80x120x185	199 - 438
36075-00048	HHPV 2021 LP	116	30÷200(230)	435÷2900(3335)	630÷1260	2.77÷5.55	9700	1400	400 - 50	max 110°	4,72 - 1.25	20 - 5.3	2,5 - 0,6	58	80x120x185	210 - 463
36075-00045	HHPV 1212 LP	116	30÷120(150)	435÷1740(2175)	345÷720	1.52÷2.9	3000	1400	230 - 50	max 110°	4,72 - 1.25	20 - 5.3	2,5 - 0,6	58	80x120x185	199 - 438
36075-00043	HHPV 2015 LP	116	30÷200(230)	435÷2900(3335)	450÷900	1.98÷3.96	7300	1400	400 - 50	max 110°	4,72 - 1.25	20 - 5.3	2,5 - 0,6	58	80x120x185	199 - 438
36075-00047	HHPV 2021 LP	116	30÷200(230)	435÷2900(3335)	630÷1260	2.77÷5.55	9700	1400	400 - 50	max 110°	4,72 - 1.25	20 - 5.3	2,5 - 0,6	58	80x120x185	210 - 463
on request	HHPX 1212 LP	118	30÷100(120)	435÷1450(1740)	345÷720	1.52÷2.9	3000	1400	230 - 50	max 110°	4,72 - 1.25	20 - 5.3	2,5 - 0,6	58	80x120x185	210 - 463
36075-00057	HHPX 2015 LP	118	30÷180(200)	435÷2610(2900)	450÷900	1.98÷3.96	7500	1400	400 - 50	max 110°	4,72 - 1.25	20 - 5.3	2,5 - 0,6	58	80x120x185	220 - 485
36075-00059	HHPX 2021 LP	118	30÷200(230)	435÷2900(3335)	630÷1260	2.77÷5.55	9000	1400	400 - 50	max 110°	4,72 - 1.25	20 - 5.3	2,5 - 0,6	58	80x120x185	230 - 507
on request	HHPX 1212 LP	118	30÷100(120)	435÷1450(1740)	345÷720	1.52÷2.9	3000	1400	230 - 50	max 110°	4,72 - 1.25	20 - 5.3	2,5 - 0,6	58	80x120x185	210 - 463
36075-00056	HHPX 2015 LP	118	30÷180(200)	435÷2610(2900)	450÷900	1.98÷3.96	7500	1400	400 - 50	max 110°	4,72 - 1.25	20 - 5.3	2,5 - 0,6	58	80x120x185	220 - 485
36075-00058	HHPX 2021 LP	118	30÷200(230)	435÷2900(3335)	630÷1260	2.77÷5.55	9000	1400	400 - 50	max 110°	4,72 - 1.25	20 - 5.3	2,5 - 0,6	58	80x120x185	230 - 507
36111-00032	THERMIC 10.1 HW 1621	120	30÷160(180)	435÷2320(2610)	1020	4,4	10 hp	1560	-	max 140°	-	-	-	60	136x105x120	200 - 440
36111-00031	THERMIC 10.1 HW 2016	120	30÷200(230)	435÷2900(3335)	450÷960	1.98÷4.2	9,3 hp	1560	-	max 110°	-	-	-		136x105x120	200 - 440
36033-00013	THERMIC 26 HW 2523	122	30÷250(275)	435÷3600(3988)	400÷1380	1.76÷6.0	23,7 hp	1450	-	max 110°	-	-	-		125x85x105	450 - 992
36033-00014	THERMIC 26 HW 3518	122	30÷350(375)	435÷5076(5438)	400÷1140	1.76÷5	23,7 hp	1450	-	max 110°	-	-	-		125x85x105	450 - 992
36033-00015	THERMIC 26 HW 2030	122	30÷200(210)	435÷2900(3045)	400÷1800	1.76÷7.9	23,7 hp	1450	-	max 110°	-	-	-		125x85x105	450 - 992
38003-00001	VULCANO 74	124	30÷120(200)	435÷1740(2900)	1260	5.55	300	-	230~50	max 110°	5,6 - 1.5	18 - 4.8	-	74	113x71x111	103.6 - 228

LAVOR

Darwin

T.S Total Stop

RPM 2800

MORE INFO
DARWIN PLUS

MORE INFO
DARWIN

CHARACTERISTICS

• Boiler ventilation unit built-on motorpump (energy saving) • Three ceramic coated pistons, brass axial pump head with built-in by-pass valve with double gasket • Suction and delivery Stainless steel valves • Vertical burner with high thermal efficiency steel coil • Temperature regulation gauge • Pivoting wheel with brake • Diesel pump with discharge by-pass valve • Detergent built-in tank (3,5 lt) for indirect suction • Possibility to integrated detergent suction with external probe • Diesel tank capacity (15 lt) • Glicerine pressure gauge • Metal lance • Accessory holder • Ergonomic handle • Integrated hose reel with 10m hp hose (only model Plus code 36093-00002)

TECHNICAL DATA

	Darwin 1310 XP	Darwin Plus 1310 XP
code	36093-00001	36093-00002
rated/max pressure	130/150 bar - 1885/2175 psi	130/150 bar - 1885/2175 psi
max delivery flow rate	600 l/h - 2.64 gpm	600 l/h - 2.64 gpm
abs. power/supply	3000 W/230V 1~50Hz	3000 W/230V 1~50Hz
motor power	2,0 kW	2,0 kW
pump model	MPBX1/2800 rpm	MPBX1/2800 rpm
T max water inlet/outlet	40/90 °C	40/ 90°C
dimension (cm)/weight	85x56x86/80 Kg (176 lbs)	85x56x86/82 Kg (180 lbs)

PLUS

Handy pressure connected hose reel to use only the necessary length of hose and to easily rewind it after use (Plus 36093-00002 model)

Shockproof front and rear protective bar , ideal for manual lifting

Removable handle without the use of tools to compact or to facilitate transportation

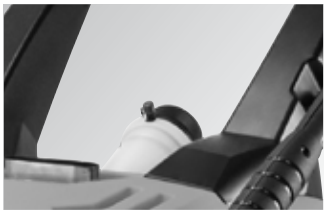

Cleaning tank with suction quantity adjustment system, possibility of suction from external tank

STANDARD EQUIPMENT

• 00080-01701 Gun M22 - 3/8	• 00080-04943 Lance M22 high/low pressure	• 00080-03186 Nozzle type 035	• 00080-02254 High pressure hose 8 m (mod. 36093-00001) • 00080-04434 High pressure hose 10 m (mod. 36093-00002)	• Storage bag (mod. 36093-00001)

Darwin Pro

T.S Total Stop

RPM 2800

MORE INFO

CHARACTERISTICS

• Boiler ventilation unit built-on motorpump (energy saving) • Three ceramic coated pistons, brass linear pump head with built-in by-pass valve with double gasket • Suction and delivery stainless steel valves • Vertical burner with high thermal efficiency steel coil • Temperature regulation gauge • Pivoting wheel with brake • Diesel pump with discharge by-pass valve • Detergent built-in tank (3,5 lt) for indirect suction • Possibility to integrated detergent suction with external probe • Diesel tank capacity (15 lt) • Glicerine pressure gauge • Metal lance • Accessory holder • Ergonomic handle • Integrated hose reel with 10m hp hose (only code 36093-00018)

TECHNICAL DATA

	Darwin Pro 1310 LP	Darwin Pro 1310 LP
code	36093-00017	36093-00018
rated/max pressure	135/150 bar - 1958/2175 psi	135/150 bar - 1958/2175 psi
max delivery flow rate	600 l/h - 2.64 gpm	600 l/h - 2.64 gpm
abs. power/supply	3000 W/230V 1~50Hz	3000 W/230V 1~50Hz
motor power	2,0 kW	2,0 kW
pump model	CL3.1/2800 rpm	CL3.1/2800 rpm
T max water inlet/outlet	40/90 °C	40/ 90°C
dimension (cm)/weight	85x56x86/80 Kg (176 lbs)	85x56x86/82 Kg (180 lbs)

PLUS

Handy pressure connected hose reel to use only the necessary length of hose and to easily rewind it after use (36093-00018 model)

Shockproof front and rear protective bar , ideal for manual lifting

Integral ceramic self-priming three-piston linear pump, the best solution for a professional product

Cleaning tank with suction quantity adjustment system, possibility of suction from external tank

STANDARD EQUIPMENT

• 00080-01701 Gun M22 - 3/8 with rotating coupling	• 00080-04943 Lance M22 high/low pressure	• 00080-03186 Nozzle type 035	• 00080-02254 High pressure hose 8 m (mod. 36093-00017) • 00080-04434 High pressure hose 10 m (mod. 36093-00018)	• Storage bag (mod. 36093-00017)

Dakota-R2

MORE INFO

CHARACTERISTICS

• Three ceramic coated pistons, brass axial pump head with built-in by-pass valve. • Low voltage and delayed Total Stop. • Suction and delivery Stainless steel valves. • Vertical burner with high thermal efficiency steel coil. • Temperature regulation gauge. • Low fuel lamp. • Safety valve. • Detergent built-in tank (4,2 lt) for indirect suction. • Pressure regulator. • Glicerine pressure gauge. • Panel with analogic controls. • Hose reel with brake **(optional)**.

TECHNICAL DATA

	Dakota-R2 1310 XP
code	36079-00010
rated/max pressure	110/130 bar - 1595/1885 psi
max delivery flow rate	600 l/h - 2.6 gpm
abs. power/supply	3000 W/230V 1~50Hz
motor power	2,2 kW
pump model	MPBX2/2800 rpm
T max water inlet/outlet	40/110 °C
dimension (cm)/weight	85x65x97/100 Kg (220 lbs)

PLUS

Side supports for gun and lance housing

Sturdy large diameter wheels for stability and ease of movement

Diesel oil level sensor with fuel shortage indicator light

Oversized axial motor pump with integral ceramic pistons and brass head

STANDARD EQUIPMENT

• 00080-01701 Gun M22 - 3/8	• 00080-01715 Lance M22 high/low pressure	• 00080-03186 Nozzle type 035	• 00080-02254 High pressure hose 8 m	

OPTIONAL

• 10001-10254 Hose reel with brake (hose not included)	• 00080-02254 8 m High pressure hose - 3/8" M22 - Ø 1/4" - 210 bar			

NPX

MORE INFO

CHARACTERISTICS

• Three ceramic coated pistons, brass axial pump head with built-in by-pass valve. • Low voltage and delayed Total Stop. • Suction and delivery Stainless steel valves. • Vertical burner with high thermal efficiency steel coil. • Temperature regulation gauge. • Low fuel lamp. • Safety valve. • Detergent built-in tank (3 lt) for indirect suction. • Pressure regulator. • Glicerine pressure gauge. • Panel with analogic controls. • Heavy duty steel frame. • Accessory holder. • Two ways fuel pump. • Hose reel with brake **(optional)**.

TECHNICAL DATA

	NPX 1211 XP	NPX 1813 XP
code	36071-00001	36071-00017
rated/max pressure	120/150 bar - 1740/2175 psi	180/210 bar - 2610/3045 psi
max delivery flow rate	660 l/h - 2.91 gpm	780 l/h - 3.43 gpm
abs. power/supply	3200 W/230V 1~50Hz	6300 W/400V 3~50Hz
motor power	2,2 kW	4,0 kW
pump model	MPBX2/2800 rpm	MPBX2/2800 rpm
T max water inlet/outlet	40/110 °C	40/110 °C
dimension (cm)/weight	96x59x89/97 Kg (213 lbs)	96x59x89/99 Kg (217 lbs)

PLUS

4 twinned solid wheels to facilitate movement on any type of surface

Optional hose reel kit (max 30 meters of high pressure hose)

Side supports for gun and lance housing

Large ergonomic rear handles to facilitate the movement of the high pressure cleaner

STANDARD EQUIPMENT

• 00080-01695 Gun M22 - 3/8 with rotating coupling	• 00080-01715 Lance M22 high/low pressure	• 00080-03188 Nozzle type 045 (mod. 1211) • 00080-03187 Nozzle type 040 (mod. 1813)	• 00080-02347 High pressure hose 10 m	

OPTIONAL

• 10001-13221 Hose reel with brake (hose not included)	• High pressure hose code: 00080-02258 10 m - 310 bar 00080-02261 20 m - 400 bar 00080-02264 10 m R2	• 00080-02966 Lance Turbo type 1 M22 - 0,45	• 00080-02957 Sandblasting lance	

Texas-R2

T.S Total Stop 24V

CRANKSHAFT

RPM 1400

MORE INFO

CHARACTERISTICS

• 4 poles electrical induction motor 1400 RPM with thermal protection • Brass linear pump with three ceramic coated pistons, double water seal and built-in by-pass valve • Suction and delivery S. S. valves. • Temperature regulation thermostat with high sensitive stainless steel sensor. • Auxiliary motor for burner • Delayed Total Stop • Professional control panel with Microleaks detector, Maintenance alert light, Power light,Diesel reserve warning light • Easy maintenance of motorpump and electronic panel by simply removing of the cover. • Vertical Diesel burner with high thermal efficiency steel coil. • Detergent built-in tank (4,2 lt) for indirect suction. • Pressure gauge • Low Diesel light • Hose reel with brake **(optional)**.

TECHNICAL DATA

	Texas-R2 1211 LP	Texas-R2 1509 LP	Texas-R2 1811 LP
code	36079-00007	36079-00008	36079-00009
rated/max pressure	110/135 bar - 1595/1958 psi	140/170 bar - 2030/2465 psi	180/210 bar - 2610/3045 psi
max delivery flow rate	660 l/h - 2.91 gpm	540 l/h - 2.3 gpm	660 l/h - 2.91 gpm
abs. power/supply	3000 W/230V 1~50Hz	3000 W/230V 1~50Hz	3000 W/400V 3~50Hz
motor power	3,0 kW	3,0 kW	3,0 kW
pump model	MP3/1400 rpm	MP3.5/1400 rpm	MP3.5/1400 rpm
T max water inlet/outlet	40/110 °C	40/110 °C	40/110 °C
dimension (cm)/weight	85x65x97/112 Kg (246 lbs)	85x65x97/112 Kg (246 lbs)	85x65x97/112 Kg (246 lbs)

PLUS

Side supports for gun and lance housing

Sturdy large diameter wheels for stability and ease of movement

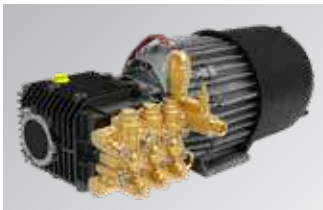

Professional motor pump with 4-pole motor (1400 rpm) and self-priming linear pump: the low rotation speed significantly extends the life of the components inside the motor pump, guaranteeing greater efficiency and silence

Diesel oil level sensor with fuel shortage indicator light

STANDARD EQUIPMENT

• 00080-04561 Gun M22 - 3/8 with rotating coupling	• 00080-01715 Lance M22 high/low pressure	• 00080-03188 Nozzle type 045 (mod. 1211) • 00080-03185 Nozzle type 030 (mod. 1509) • 00080-03186 Nozzle type 035 (mod. 1811)	• 00080-02417 High pressure hose 10 m	

OPTIONAL

• 10001-10254 Hose reel with brake (hose not included)	• High pressure hose code: 00080-02254 8 m - 210 bar (mod. 1211) 00080-02258 10 m - 310 bar 00080-02261 20 m - 400 bar 00080-02264 10 m R2	• Turbo Lance code: 00080-02966 00080-02981	• 00080-02957 Sandblasting lance	

LKX *single phase*

T.S Total Stop 24V

CRANKSHAFT

RPM 1400

MORE INFO

CHARACTERISTICS

• 4 poles electrical motor (1400 rpm) with thermal protection. • Three ceramic coated pistons, brass linear pump head with built-in by-pass valve. • Low voltage and delayed Total Stop. • Suction and delivery Stainless steel valves. • Vertical burner with high thermal efficiency steel coil. • Temperature regulation gauge with high sensitive stainless steel sensor. • Detergent built-in tank (3 lt) for indirect suction. • Auxiliary motor for burner. • Heavy duty steel frame. • Hose reel with brake **(optional)**.

TECHNICAL DATA

	LKX 1310 LP
code	36072-00167
rated/max pressure	110/150 bar - 1595/2175 psi
max delivery flow rate	660 l/h - 2.91 gpm
abs. power/supply	3000 W/230V 1~50Hz
motor power	2,2 kW
pump model	MP3/1400 rpm
T max water inlet/outlet	40/110 °C
dimension (cm)/weight	96x59x89/112 Kg (246 lbs)

PLUS

4 twinned solid wheels to facilitate movement on any type of surface

Optional hose reel kit (max 30 meters of high pressure hose)

Side supports for gun and lance housing

Professional motor pump with 4-pole motor (1400 rpm) and self-priming linear pump: the low rotation speed significantly extends the life of the components inside the motor pump, guaranteeing greater efficiency and silence

STANDARD EQUIPMENT

• 00080-01695 Gun M22 - 3/8 with rotating coupling	• 00080-01715 Lance M22 high/low pressure	• 00080-03188 Nozzle type 045	• 00080-02347 High pressure hose 10 m	

OPTIONAL

• 10001-13221 Hose reel with brake (hose not included	• On request models with header tank and/or antiscale device.	• 00073-00114 Antiscale LC-PRECAL (pcs. 4 x 5 lt.)	• Turbo Lance code: 00080-02966	• High pressure hose code: 00080-02258 10 m - 310 bar 00080-02261 20 m - 400 bar 00080-02264 10 m R2 00080-02262 20 m - 400 bar
• Sandblasting lance code: 00080-02957				

LKX three phase

T.S Total Stop 24V

CRANKSHAFT

RPM 1400

MORE INFO

CHARACTERISTICS

• 4 poles electrical motor (1400 rpm) with thermal protection and water cooling. • Three full ceramic pistons, brass linear pump head with built-in by-pass valve. • Low voltage and delayed Total Stop. • Suction and delivery Stainless steel valves. • Vertical burner with high thermal efficiency steel coil. • Temperature regulation gauge with high sensitive stainless steel sensor. • Detergent built-in tank (3 lt) for indirect suction. • Auxiliary motor for burner. • Heavy duty steel frame. • Hose reel with brake **(optional)**.

TECHNICAL DATA

	LKX 1515 LP	LKX 2015 LP
code	36072-00159	36072-00160
rated/max pressure	150/180 bar - 2175/2610 psi	200/230 bar - 2900/3335 psi
max delivery flow rate	900 l/h - 3.96 gpm	900 l/h - 3.96 gpm
abs. power/supply	5500 W/400V 3~50Hz	7300 W/400V 3~50Hz
motor power	4,0 kW	5,5 kW
pump model	MPW3.5/1400 rpm	MPW3.5/1400 rpm
T max water inlet/outlet	40/110 °C	40/110 °C
dimension (cm)/weight	96x59x89/125 Kg (275 lbs)	96x59x89/128 Kg (282 lbs)

PLUS

4 twinned solid wheels to facilitate movement on any type of surface

Optional hose reel kit (max 30 meters of high pressure hose)

Side supports for gun and lance housing

Professional motor pump with 4-pole motor (1400 rpm) and self-priming linear pump: the low rotation speed significantly extends the life of the components inside the motor pump, guaranteeing greater efficiency and silence

Other available versions:

- 36072-00165 LKX 2015 with header tank
- 36072-00184 LKX 2015 with header tank and antiscale device

STANDARD EQUIPMENT

• 00080-01695 Gun M22 - 3/8 with rotating coupling	• 00080-01715 Lance M22 high/low pressure	• 00080-03188 Nozzle type 045 (mod. 2015) • 00080-03191 Nozzle type 060 (mod. 1515)	• 00080-02347 High pressure hose 10 m	

OPTIONAL

• 10001-13221 Hose reel with brake (hose not included	• On request models with header tank and/or antiscale device.	• 00073-00114 Antiscale LC-PRECAL (pcs. 4 x 5 lt.)	• Turbo Lance code: 00080-02966 - (mod. 2015) 00080-02967 - (mod. 1515)	• High pressure hose code: 00080-02258 10 m - 310 bar 00080-02261 20 m - 400 bar 00080-02264 10 m R2 00080-02262 20 m - 400 bar 00080-02263 10 m - 400 bar food industry (mod.2015)
• Sandblasting lance code: 00080-02957 (mod. 2015) 00080-02958 (mod. 1515)				

LAVOR

HLR *single phase*

T.S Total Stop 24V

CRANKSHAFT

RPM 1400

Ni NICKEL PLATING

MORE INFO

CHARACTERISTICS

• 4 poles electrical motor (1400 rpm) with thermal protection and water cooling. • Three ceramic coated pistons. • Built-in by-pass valve nickel plating brass linear pump head with high temperature water seals and bushing. • Low voltage and delayed Total Stop. • Suction and delivery Stainless steel valves. • Vertical burner with high thermal efficiency steel coil. • Temperature regulation gauge with high sensitive stainless steel sensor. • Detergent built-in tank (3 lt) for indirect suction. • Auxiliary motor for burner. • Heavy duty steel frame. • Hose reel with brake **(optional)**.

TECHNICAL DATA

	HLR 1211 LP	HLR 1510 LP
code	36072-00179	36072-00180
rated/max pressure	110/150 bar - 1595/2175 psi	150/180 bar - 2175/2610 psi
max delivery flow rate	660 l/h - 2.91 gpm	600 l/h - 2.64 gpm
abs. power/supply	3000 W/230V 1~50Hz	3000 W/230V 1~50Hz
motor power	2,2 kW	2,2 kW
pump model	MP3 Ni/1400 rpm	MP3 Ni/1400 rpm
T max water inlet/outlet	40/110 °C	40/110 °C
dimension (cm)/weight	96x59x89/112 Kg (246 lbs)	96x59x89/112 Kg (246 lbs)

PLUS

4 twinned solid wheels to facilitate movement on any type of surface

Optional hose reel kit (max 30 meters of high pressure hose)

Side supports for gun and lance housing

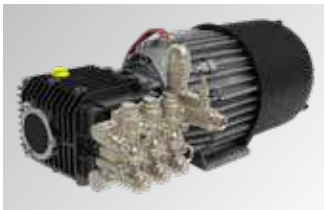

Pump head in nickel-plated brass and water seals for high temperatures for greater protection from chemicals or from other substances dissolved in water

STANDARD EQUIPMENT

• 00080-01695 Gun M22 - 3/8 with rotating coupling	• 00080-01715 Lance M22 high/low pressure	• 00080-03188 Nozzle type 045 (mod. 1211) • 00080-03185 Nozzle type 030 (mod. 1510)	• 00080-02347 High pressure hose 10 m	

OPTIONAL

• 10001-13221 Hose reel with brake (hose not included	• High pressure hose code: 00080-02258 10 m - 310 bar 00080-02261 20 m - 400 bar 00080-02264 10 m R2 00080-02262 20 m - 400 bar 00080-02263 10 m - 400 bar food industry	• Turbo Lance code: 00080-02966 - (mod. 1211) 00080-02986 - (mod. 1510)	• 00080-02957 Sandblasting lance	

HLR three phase

T.S Total Stop 24V

CRANKSHAFT

RPM 1400

Models: 1515 LP
2015 LP/2021 LP

Ni NICKEL PLATING

MORE INFO

CHARACTERISTICS

• 4 poles electrical motor (1400 rpm) with thermal protection and water cooling (except HLR 1614 LP model). • Three ceramic pistons, three ceramic coated pistons (mod. 1614 LP) • Built-in by-pass valve nickel plating brass linear pump head with high temperature water seals and bushing. • Integrated elastic joint, for best pump coupling (1614 Excluded). • Low voltage and delayed Total Stop. • Suction and delivery Stainless steel valves. • Vertical burner with high thermal efficiency steel coil. • Temperature regulation gauge with high sensitive stainless steel sensor. • Detergent built-in tank 3 l. • Auxiliary motor for burner air cooling and mechanical two ways fuel pump. • Hose reel **(optional)**.

TECHNICAL DATA

	HLR 1614 LP	HLR 1515 LP	HLR 2015 LP	HLR 2021 LP
code	36072-00181	36072-00100	36072-00101	36072-00102
rated/max pressure	160/190 bar - 2321/2755 psi	150/180 bar - 2175/2610 psi	200/230 bar - 2900/3335 psi	200/230 bar - 2900/3335 psi
max delivery flow rate	840 l/h - 3.70 gpm	900 l/h - 3.96 gpm	900 l/h - 3.96 gpm	1260 l/h - 5.55 gpm
abs. power/supply	4200 W/400V 3~50Hz	5500 W/400V 3~50Hz	7300 W/400V 3~50Hz	9700 W/400V 3~50Hz
motor power	4,0 kW	4,0 kW	5,5 kW	7,5 kW
pump model	CL6.0 Ni/1400 rpm	CL6.0 Ni/1400 rpm	CL6.0 Ni/1400 rpm	CL6.0 Ni/1400 rpm
T max water inlet/outlet	40/110 °C	40/110 °C	40/110 °C	40/110 °C
dimension (cm)/weight	96x59x89/109 Kg (240 lbs)	96x59x89/127 Kg (280 lbs)	96x59x89/129 Kg (284 lbs)	96x59x89/131 Kg (288 lbs)

PLUS

4 twinned solid wheels to facilitate movement on any type of surface

Built-in elastic joint for better pump/motor coupling

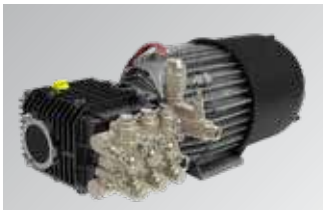

New CL 6.0 self-priming three-piston integral ceramic pump, tapered roller bearings, double oil viewer, nickel-plated brass head and high temperature water seal

New flanged pressure regulating valve L3.1, internal passages resized to ensure correct operation even in high operating flow conditions

STANDARD EQUIPMENT

• 00080-01695 Gun M22 - 3/8 with rotating coupling	• 00080-01715 Lance M22 high/low pressure	• 00080-03186 Nozzle type 035 (mod. 1614) • 00080-03191 Nozzle type 060 (mod. 1515) • 00080-03188 Nozzle type 045 (mod. 2015) • 00080-03193 Nozzle type 070 (mod. 2021)	• 00080-02347 High pressure hose 10 m	

OPTIONAL

• 10001-13221 Hose reel with brake (hose not included	• 10002-16460 Water tank	• 00073-00114 - Antiscale LC-PRECAL (pz. 4 x 5 lt.)	• Turbo Lance code: 00080-02966 - (mod. 1614/2015) 00080-02967 - (mod. 1515) 00080-02968 - (mod. 2021) 00080-02986 - (mod. 1614)	• Sandblasting lance code: 00080-02957 (mod. 1614/2015) 00080-02958 (mod. 1515) • 00080-02959 (mod. 2021)
• High pressure hose code: 00080-02258 10 m - 310 bar 00080-02261 20 m - 400 bar 00080-02264 10 m R2 00080-02262 20 m - 400 bar 00080-02263 10 m - 400 bar food industry				

Tekna

T.S Total Stop 24V

CRANKSHAFT

RPM 1400

MORE INFO

CHARACTERISTICS

• 4 poles electrical motor (1400 rpm) with thermal protection and water cooling. Three ceramic pistons, brass linear pump head with built-in by-pass valve. • Low voltage and delayed Total Stop. • Suction and delivery Stainless steel valves. • Vertical burner with high thermal efficiency steel coil. • High pressure detergent flow with 22 liters integrated detergent tank • Auxiliary motor for burner air-cooling and two ways fuel pump. • Temperature regulation gauge with high sensitive stainless steel sensor. • Low fuel lamp and cut off. • Safety valve. • Header tank and antiscale device. Panel with analogic controls. Hose reel **(optional)**.

TECHNICAL DATA

	Tekna 2015 LP	Tekna 2021 LP
code	36073-00002	36073-00021
rated/max pressure	200/230 bar - 2900/3335 psi	200/230 bar - 2900/3335 psi
max delivery flow rate	900 l/h - 3.96 gpm	1260 l/h - 5.55 gpm
abs. power/supply	7300 W/400V 3~50Hz	9700 W/400V 3~50Hz
motor power	5,5 kW	7,5 kW
pump model	CL6.0/1400 rpm	CL6.0/1400 rpm
T max water inlet/outlet	40/110 °C	40/110 °C
dimension (cm)/weight	123x70x88/143 Kg (315 lbs)	123x70x88/145 Kg (319 lbs)

PLUS

Large 22-litre fuel and detergent tanks

New CL 6.0 self-priming pump with three pistons in integral ceramic, tapered roller bearings, double oil viewer and brass head

New flanged pressure regulating valve L3.1, internal passages resized to ensure correct operation even in high operating flow conditions

Easily removable side panels and upper fairing for faster maintenance

STANDARD EQUIPMENT

• 00080-01695 Gun M22 - 3/8 with rotating coupling	• 00080-01727 Lance M22 high pressure.	• 00080-03188 Nozzle type 045 (mod. 2015 LP) • 00080-03193 Nozzle type 070 (mod. 2021 LP)	• 00080-02347 High pressure hose 10 m	

OPTIONAL

• 10001-10198 Hose reel with brake (hose not included)	• 00073-00114 Antiscale LC-PRECAL (pcs. 4 x 5 lt.)	• Turbo Lance code: 00080-02966 - (mod. 2015) 00080-02968 - (mod. 2021)	• High pressure hose code: 00080-02258 10 m - 310 bar (mod. 2015) 00080-02261 20 m - 400 bar 00080-02264 10 m R2 00080-02262 20 m - 400 bar 00080-02263 10 m - 400 bar food industry	• Sandblasting lance code: 00080-02957 (mod. 1614-2015) 00080-02958 (mod. 1515)

LAVOR

HTR

T.S Total Stop 24V

CRANKSHAFT

RPM 1400

Ni NICKEL PLATING

MORE INFO

CHARACTERISTICS

• 4 poles electrical motor (1400 rpm) with thermal protection and water cooling. • Three ceramic pistons, Nickel plating brass linear pump head with high temperature water seals and bushing. • Integrated elastic joint, for best pump coupling. • Low voltage and delayed Total Stop. • Vertical burner with high thermal efficiency steel coil. • High pressure detergent flow with 22 liters integrated detergent tank • Auxiliary motor for burner air-cooling and two ways fuel pump. • Temperature regulation gauge with high sensitive stainless steel sensor. • Header tank and antiscale device. • Pressure accumulator for hose and gun vibrations prevention. • Hose reel **(optional)**

TECHNICAL DATA

	HTR 2015 LP	HTR 2021 LP	HTR 2515 LP
code	36074-00040	36074-00041	36074-00052
rated/max pressure	200/230 bar - 2900/3335 psi	200/230 bar - 2900/3335 psi	250/280 bar - 3600/4061 psi
max delivery flow rate	900 l/h - 3.96 gpm	1260 l/h - 5.55 gpm	900 l/h - 3.96 gpm
abs. power/supply	7300 W/400V 3~50Hz	9700 W/400V 3~50Hz	8800 W/400V 3~50Hz
motor power	5,5 kW	7,5 kW	7,5 kW
pump model	CL6.0 Ni/1400 rpm	CL6.0 Ni/1400 rpm	CL6.0 Ni/1400 rpm
T max water inlet/outlet	40/110 °C	40/110 °C	40/110 °C
dimension (cm)/weight	123x70x88/169 Kg (372 lbs)	123x70x88/171 Kg (376 lbs)	123x70x88/173 Kg (381 lbs)

PLUS

Built-in elastic joint for better pump/ motor coupling

New CL 6.0 self-priming three-piston integral ceramic pump, tapered roller bearings, double oil viewer, nickel-plated brass head and high temperature water seals

New flanged pressure regulating valve L3.1, internal passages resized to ensure correct operation even in high operating flow conditions

Easily removable side panels and upper fairing for faster maintenance

STANDARD EQUIPMENT

• 00080-01695 Gun M22 - 3/8 with rotating coupling	• 00080-01727 Lance M22 high pressure.	• 00080-03188 Nozzle type 045 (mod. 2015 LP) • 00080-03193 Nozzle type 070 (mod. 2021 LP) • 00080-03187 Nozzle type 040 (mod. 2515 LP)	• 00080-02347 High pressure hose 10 m	

OPTIONAL

• 10001-10198 - Hose reel with brake (hose not included)	• 00073-00114 - Antiscale LC-PRECAL (pz. 4 x 5 lt.)	• Turbo Lance code: 00080-02966 - (mod. 2015/2515) 00080-02968 - (mod. 2021)	• High pressure hose code: 00080-02258 10 m - 310 bar 00080-02261 20 m - 400 bar 00080-02264 10 m R2 00080-02262 20 m - 400 bar 00080-02263 10 m - 400 bar food industry	• Sandblasting lance code: 00080-02957 (mod. 2015/2515) 00080-02958 (mod. 2021)

HMR

Motor with elastic joint

T.S Total Stop

CRANKSHAFT

RPM 1400

MORE INFO

CHARACTERISTICS

• Integrated elastic joint, for best pump coupling • 4 poles professional electrical motor (1400 rpm) • Triplex pump with three ceramic pistons, brass linear pump head • Delayed Total Stop • Professional pressure unloader valve • 25 lt Diesel tank with level float • Integrated detergent suction with proportional regulation (tank not included) • 2 big solid wheels (Ø 260 mm) + 2 pivoting wheels with brake • Low fuel indicator • Temperature setting thermostat • Safety valve • Pressure gauge • Boiler thermal protection • Contactor and motor protection with amperometric control • Independent boiler ventilation unit • Flame control (only mod. 2021) • Single central bar for vertical lifting with crane or winches • Steel frame, stainless steel cover • On request available with stainless steel coil

TECHNICAL DATA

	HMR 2015 LP	HMR 1521 LP	HMR 2021 LP
code	36034-00015	36034-00016	36034-00017
rated/max pressure	190/200 bar - 2755/2900 psi	150/160 bar - 2175/2320 psi	190/200 bar - 2755/2900 psi
max delivery flow rate	900 l/h - 3.9 gpm	1260 l/h - 5.55 gpm	1260 l/h - 5.55 gpm
abs. power/supply	6000 W/400V 3~50Hz	6000 W/400V 3~50Hz	9700 W/400V 3~50Hz
motor power	5,5 kW	5,5 kW	7,5 kW
pump model	CL6.0/1400 rpm	CL6.0/1400 rpm	CL6.0/1400 rpm
T max water inlet/outlet	60/110 °C	60/110 °C	60/110 °C
dimension (cm)/weight	90x65x87/160 Kg (352 lbs)	90x65x87/160 Kg (352 lbs)	90x65x87/160 Kg (374 lbs)

PLUS

Robust tubular frame in painted steel with central bar for lifting with crane or hoist, practical side hooks for accessories and protective top covers in stainless steel to preserve the motor pump from accidental shocks

Air chamber front wheels and two pivoting rear wheels for optimal stability and ease of movement on any type of surface

Widely oversized 4-pole industrial electric motor, protected from painting and equipped with elastic joint for better motor/pump coupling

Large 25-litre Diesel tank with level indicator and fuel shortage indicator light

STANDARD EQUIPMENT

• 00080-01695 Gun M22 - 3/8 with rotating coupling	• 10002-04732 Lance M22 high/ low pressure	• 00080-03247 nozzle 050 (mod. 2015) • 00080-03341 nozzle 075 (mod. 1521) • 00080-00303 nozzle 070 (mod. 2021)	• 00014-00514 High pressure hose 10 m - R2 5/16 (mod. 2015) • 10002-03312 High pressure hose 10 m - R2 3/8 (mod. 1521/2021)	

OPTIONAL

• Turbo lance code: 00080-02967 (mod. 2015) 00080-02968 (mod. 1521/2021)	• Sand-blasting lance code: 00080-02958 (mod. 2015) 00080-02959 (mod. 1521/2021)	• 00080-05260 Hose reel without hose (mod. 2015/1521/2021) • 00080-05262 Hose reel with hose R2 5/16 da 20mt (mod. 2015) • 00080-05261 Hose reel with hose R2 3/8 da 20mt (mod. 2015/1521/2021)	• 10002-16460 water tray	

Kansas 2.0

ZERO EMISSION
High efficiency **SILENT**

NEW

T.S Total Stop 24V
CRANKSHAFT
RPM 1400
ECO
FULL ELECTRIC

MORE INFO

CHARACTERISTICS

• **18/24/36 kW 70 lt electric boiler** • 4-pole electric motor (1400 rpm) with thermal protection, air cooling • Three ceramic pistons, brass linear pump head • Stainless steel suction and delivery valves and hot water gaskets • Professional nickel-plated drain valve suitable for hot water • Low voltage and delayed Total Stop • Detergent flow with integrated 22 litre detergent tank with injector (low pressure) • Non-marking wheels • Safety valve • Anti-scale device, with integrated 22 litre tank • Panel with analogue controls • Hose reel (optional) • General shutdown in case of prolonged machine non-use • Micro-leak detection system

TECHNICAL DATA

	Kansas 2.0 1510 LP	Kansas 2.0 1512 LP	Kansas 2.0 1710 LP	Kansas 2.0 1912 LP
code	36137-00004	36137-00005	36137-00006	36137-00007
rated/max pressure	150/180 bar - 2175/2610 psi	150/180 bar - 2175/2610 psi	170/190 bar - 2465/2755 psi	190/210 bar - 2755/3045 psi
max delivery flow rate	600 l/h - 2.6 gpm	720 l/h - 3.1 gpm	600 l/h - 2.6 gpm	720 l/h - 3.1 gpm
abs. power/supply	21000 W/400V 3~50Hz	28000 W/400V 3~50Hz	28000 W/400V 3~50Hz	41000 W/400V 3~50Hz
heating power	18 kW	24 kW	24 kW	36 kW
pump model	MPCL3.8/1400 rpm	MPCL3.8/1400 rpm	MPCL3.8/1400 rpm	MPCL3.8/1400 rpm
T max water inlet/outlet	60/85 °C	60/85 °C	60/85 °C	60/85 °C
dimension (cm)/weight	125x69x87/150 Kg (330 lbs)	125x69x87/150 Kg - 330 lbs	125x69x87/150 Kg - 330 lbs	125x69x87/150 Kg - 330 lbs

PLUS

Professional motor pump with 4-pole motor (1400 rpm) and self-priming linear pump with three pistons in integral ceramic, double oil viewer, brass head and water seals for operation up to 85°C

Electric boiler heating power 18/24/36 kW, effective volume 70 litres

Large 22-litre detergent and anti-scale tanks

Large-diameter front and pivoting rear wheels for stable positioning and to facilitate movement on any type of surface

STANDARD EQUIPMENT

• 00080-01695 Gun M22 - 3/8" with rotating coupling.	• 10002-04732 Lance M22 high pressure.	• 00080-03230 Nozzle type 030 (mod. 1510) • 00080-03220 Nozzle type 045 (mod. 1512) • 00080-00355 Nozzle type 028 (mod. 1710) • 00080-00354 Nozzle type 040 (mod. 1912)	• 00080-02263 High pressure hose food industry 10 m	

OPTIONAL

• 10001-10198 - Hose reel with brake (hose not included)	• 00073-00114 - Antiscale LC-PRECAL (pz. 4 x 5 lt.)	• Turbo Lance code: 00080-02966 - (mod. 1512/1912) 00080-02986 - (mod. 1510/1710)		

HHPV

Motor with elastic joint

Only mod. 2015/2021

T.S Total Stop 24V

CRANKSHAFT

RPM 1400

MORE INFO

CHARACTERISTICS

• 4-pole electric industrial motor air cooled (1400 rpm) with thermal protection • Integrated flexible coupling, for a better pump/motor coupling (mod 2015/2021) • CL3.8 (mod 1212) CL6.0 (mod 2015/2021) pumps with brass head and three ceramic pistons, flanged valve (mod 2015/2021) • Professional unloader valve with external by-pass • Suction and delivery valves in stainless steel • Low voltage delayed Total Stop • High pressure detergent suction with solenoid valve • 25 liter Diesel tank with level indicator and filter • Vertical boiler with high thermal efficiency steel coil • Control panel with protective cover • General shutdown (when the machine is not used for a long time) • Anti-limescale device with pump and tank (2.5 l) antifreeze heater and soundproof panel • Microleak detector • Accessory holder • Burner activated by flow switch • Internal insulating protection to resist high/low temperatures • Hose reel with 20m h.p hose included • **Antifreeze resistance • Internal water tank with float level • Flame control • Antiscale system (liquid) included**

TECHNICAL DATA

	HHPV 1212 LP	HHPV 2015 LP	HHPV 2021 LP
code	36075-00045	36075-00043	36075-00047
rated/max pressure	100/110 bar - 1450/1595 psi	200/230 bar - 2900/3335 psi	200/230 bar - 2900/3335 psi
max delivery flow rate	720 l/h - 2.9 gpm	900 l/h - 3.96 gpm	1260 l/h - 5.55 gpm
abs. power/supply	3000 W/230V 1~50Hz	7300 W/400V 3~50Hz	9700 W/400V 3~50Hz
motor power	2,2 kW	5,5 kW	7,5 kW
electrical supply	-	3P+T+N	3P+T+N
pump model	CL3.8/1400 rpm	CL6.0/1400 rpm	CL6.0/1400 rpm
T max water inlet/outlet	60/110 °C	60/110 °C	60/110 °C
dimension (cm)/weight	83x53x183/190 Kg (418 lbs)	83x53x183/200 Kg (440 lbs)	83x53x183/210 Kg (462 lbs)

PLUS

All the models are equipped with a stainless steel outlet with rain protection

Automatic hose reel kit with 20 meters of hose (standard on the versions 36075-00045 / 36075-00043 / 36075-00047) and hose guide to facilitate the unwinding and rolling of the hose during work

On request, versions with a structure entirely made of stainless steel are available

Easily removable panels and upper canopy for faster maintenance

Other available versions:

- 36075-00046 - HHPV 1212 without hose reel with 10m h.p hose
- 36075-00044 - HHPV 2015 without hose reel with 10m h.p hose
- 36075-00048 - HHPV 2021 without hose reel with 10m h.p hose

STANDARD EQUIPMENT

• 00080-01695 Gun M22 - 3/8 with rotating coupling	• 00080-01727 Lance M22 high pressure.	• 00080-03189 Nozzle type 050 (mod. 1212) • 00080-03188 Nozzle type 045 (mod. 2015) • 00080-03193 Nozzle type 070 (mod. 2021)	• 00014-00268 High pressure hose R2 20 m (mod. 2021) • 00080-02262 High pressure hose R2 20 m (mod. 1212/2015)	

OPTIONAL

• Rotating booms (on request)	• High pressure hose code: 00080-02258 10 m - 310 bar 00080-02261 20 m - 400 bar 00080-02264 10 m R2 00080-02262 20 m - 400 bar 00080-02263 10 m - 400 bar food industry	• Turbo Lance code: 00080-02966 - (mod. 1211/2015) 00080-02968 - (mod. 2021)	• Sand-blasting lance code: 00080-02958 (mod. 1211/2015) 00080-02959 (mod. 2021)	

HHPX

Motor with flexible coupling

mod. 2015/2021

T.S Total Stop 24V

CRANKSHAFT

RPM 1400

MORE INFO

CHARACTERISTICS

• 4 poles electrical motor (1400 RPM) with thermal protection and air cooling. • Integrated elastic joint, for best pump coupling (excluding single-phase models). • Three full ceramic pistons, brass triplex pumps head. • External by-pass vave. • Suction and delivery S. S. valves. • Low voltage and delayed Total Stop. • High pressure detergent suction (from external tank in hose reel model models) with solenoid valve. • Diesel tank 25 liters with level gauge and filter. • Vertical burner with high thermal efficiency steel coil. • Control panel with protection cover. • General stop (when the machine is not used for a long time). • Anti-scale device with pump and tank (1 l). • Micro-leaks detector. • Accessory holder. • Flow switch burner control and flame sensor. • Automatic hose reel with 20m high pressure hose (hose reel models). • Low temperature thermoacoustic insulation protection/ heating. • Heating resistance for frost protection. • Internal water tank with float level. • Stainless steel cover

TECHNICAL DATA

	HHPX 1212 LP	HHPX 2015 LP	HHPX 2021 LP
code	on request	36075-00056	36075-00058
max operating pressure	100/120 bar - 1450/1740 psi	180/200 bar - 2610/2900 psi	180/200 bar - 2610/2900 psi
flow rate	720 l/h - 2.9 gpm	900 l/h - 3.96 gpm	1260 l/h - 5.55 gpm
power consumption/voltage	3000 W/230V 1~50Hz	7500 W/400V 3~50Hz	9000 W/400V 3~50Hz
motor power	2,2 kW	5,5 kW	6,6 kW
electrical supply	-	3P+T+N	3P+T+N
type of motor-pump	CL3.8/1400 rpm	CL6.0/1400 rpm	CL6.0/1400 rpm
max inlet/outlet temp	60/110 °C	60/110 °C	60/110 °C
dimension (cm)	83x53x183/210 Kg (462 lbs)	83x53x183/220 Kg (485 lbs)	83x53x183/230 Kg (507 lbs)

PLUS

All models are equipped with a stainless steel chimney and rain cover

Optional: Automatic hose reel kit with 20 meters of hose and hose guide to facilitate winding and unwinding of hose during work

Reinforced stainless steel supporting feet

Easily removable panels and top canopy for quicker maintenance

Other available versions:

- on request - HHPX 1212 without hose reel with 10m h.p hose
- 36075-00057- HHPX 2015 without hose reel with 10m h.p hose
- 36075-00059 - HHPX 2021 without hose reel with 10m h.p hose

STANDARD EQUIPMENT

• 00080-01695 Gun M22 - 3/8 with rotating coupling	• 00080-01727 Lance M22 high pressure.	• 00080-03189 Nozzle type 050 (mod. 1212) • 00080-03188 Nozzle type 045 (mod. 2015) • 00080-03193 Nozzle type 070 (mod. 2021)	• 00014-00268 High pressure hose R2 20 m (mod. 2021) • 00080-02262 High pressure hose R2 20 m (mod. 1212/2015)	

Thermic 10.1 HW Hot water self-contained unit

T.V Thermal Valve

CRANKSHAFT

DIESEL

MORE INFO

CHARACTERISTICS

• Sturdy frame with rubber feet, bar for vertical lift • Professional hot water high pressure cleaner for uses without connection to electricity grid • Yanmar L100V Diesel engine (air cooled) • Electrical starting-up, battery included • No engine-oil safety device (oil-alert) • Automatic decelerator to reduce rpm in by-pass mode • 1560 rpm reducer between engine and pump. • CL6.0 Lavor linear pump, 3 ceramic pistons, brass pump head and flanged unloader valve with knob for pressure adjusting • Diesel tank with level float and fill up filter • Double coil vertical high efficiency boiler with stainless steel outer casing • Electronic temperature setting system for constant water temperature • Flow-switch operated burner • Safety valve • Boiler thermal protection • Flame control kit

TECHNICAL DATA

	Thermic 10.1 HW 1621	Thermic 10.1 HW 2016
code	36111-00032	36111-00031
rated/max pressure	160/180 bar - 2320/2610 psi	200/230 bar - 2900/3335 psi
max delivery flow rate	1260 l/h - 5.5 gpm	960 l/h - 4.1 gpm
engine type	Yanmar L100V	Yanmar L100V
motor power	9,3 hp	9,3 hp
pump model	CL6.0/1560 rpm	CL6.0/1560 rpm
T max water inlet/outlet	60/110 °C	60/110 °C
dimension (cm)/weight	120x73x95/200 Kg (440 lbs)	120x73x95/200 Kg (440 lbs)

PLUS

Sturdy painted steel frame with bar for lifting with crane or hoist, practical side hooks for accessories and protective stainless steel covers to preserve the motor pump from accidental impacts

Engine indicator panel with electric start, automatic regulation of the number of revolutions, boiler panel with burner activation switch and electronic temperature regulation

Yanmar L100V diesel engine, electric start panel with control lights, automatic rev decelerator

Flame control: stops hot water operation in the event of a burner malfunction, blocking the diesel solenoid valve and avoiding fouling of the unburned fuel boiler. It also prevents the flame from remaining lit even when the burner is already extinguished.

STANDARD EQUIPMENT

• 00080-01695 Gun M22 - 3/8 with rotating coupling	• 10002-04732 Lance M22 high/ low pressure	• 00080-03247 nozzle 050 (mod. 2016) • 00080-03341 nozzle 075 (mod. 1621)	• 00014-00514 High pressure hose 10 m - R2 5/16 (mod. 2016) • 10002-04109 High pressure hose 10 m - R2 3/8 (mod. 1621)	• Flame control
• RPM decelerator kit				

OPTIONAL

• 10002-04739 Turbo lance 255 bar 050 (mod. 2016) • 10002-04741 Turbo lance 255 bar 070 (mod. 1621)	• 00080-02258 Extension hose 10 m • 00080-02262 Extension hose 20 m	• 00080-02958 Sand blasting lance	• 10001-00983 Wheel kit	• 10001-01014 Roofing panels kit
• 00080-01503 Hose reel with hose 20m				

Thermic 26 HW

CRANKSHAFT

DIESEL

MORE INFO

CHARACTERISTICS

• Professional hot pressure washer for use without connection to the electricity mains • 45 lt Diesel tank with level float and filling filter • High efficiency vertical stainless steel boiler with double spiral coil • Electronic temperature regulation system with low value oscillation • Burner activated by flow switch • Safety valve • Boiler thermal protection • Flame control kit • Kohler KDW1003 Diesel engine • TW / RW Premium pumps • Speed reducer (with 1450 rpm) • Electric start • Low oil safety device engine • Hour meter • Manual speed regulator • Professional adjustment valve with gradual pressure recovery • Thermostatic valve • Large size inlet water filter with inspectable cartridge pump • Option of water suction from external tank • Suitable for highly professional use

TECHNICAL DATA

	Thermic 26 HW 2523	Thermic 26 HW 3518	Thermic 26 HW 2030
code	36033-00013	36033-00014	36033-00015
rated/max pressure	250/275 bar - 3625/3988 psi	350/375 bar - 5076/5438 psi	200/210 bar - 2900/3045 psi
max delivery flow rate	1380 l/h - 6 gpm	1140 l/h - 5.0 gpm	1800 l/h - 7.9 gpm
engine type	KDW 1003	KDW 1003	KDW 1003
motor power	23,7 hp	23,7 hp	23,7 hp
T max water inlet/outlet	60/110°	60/110°	60/110°
dimension (cm)/weight	125x85x105/450 Kg (992 lbs)	125x85x105/450 Kg (992 lbs)	125x85x105/450 Kg (992 lbs)

PLUS

Engine indicator light panel with electric start, hour counter and manual adjustment of the number of revolutions, boiler panel with burner activation switch and electronic temperature regulation

Kohler KDW 1003 water-cooled engine, 3 cylinders in line to minimise vibrations

RW/TW Premium self-priming three-piston pumps in integral ceramic, tapered roller bearings, double oil viewer and brass head

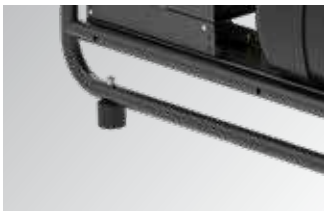

Sturdy painted steel frame with vertical lifting bar, practical side hooks for accessories and protective stainless steel covers to preserve the motor pump from accidental impacts

STANDARD EQUIPMENT

• 00080-01097 Gun ML 955 - M22 with quick coupling (mod. 2523/2030) • 00080-01098 Gun ML 955 - M24 with quick coupling (mod. 3518)	• 10002-04019 lance SF40 mecline M22 (mod.2523/2030) • 10002-04020 lance SF40 mecline M24 (mod.3518)	• 00080-01368 Nozzle type 040 (mod. 3518) • 00080-00359 Nozzle type 055 (mod. 2523) • 00080-03339 Nozzle type 2510 (mod. 2030)	• 10002-04109 High pressure hose 10 m (mod.2523/2030) • 10002-04110 High pressure hose 10 m (mod.3518)	

OPTIONAL

• 10002-03885 Turbo lance	• Hose reel (on request)	• 00058-00642 Pipe cleaning hose		

Vulcano 74

MORE INFO

CHARACTERISTICS

Boiler feeding: Diesel High thermal efficiency vertical burner. • Shock-resistant self-bearing frame. • 4 big wheels for easy move. • Gasoil tank high capacity ensuring longer working. • Quick couplings supplied with the machine. • Diesel tank capacity 18 l. • High pressure hose 3/8″ Ø 5/16″ 10 m, to connect any cold high pressure cleaner to Vulcano **(optional)**.

TECHNICAL DATA

	Vulcano 74
code	38003-00001
rated/max pressure	120/200 bar - 1740/2900 psi
max delivery flow rate	1260 l/h - 5.55 gpm
abs. power/supply	300 W/230V 1~50Hz
heat output	74 kW
T max water inlet/outlet	110/ °C
dimension (cm)/weight	94x65x90/44 Kg (88 lbs)

PLUS

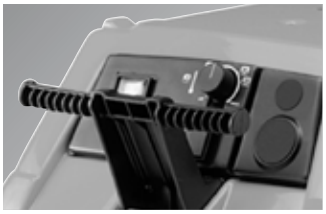

Simple and intuitive control panel , with switch and temperature regulation thermostat

High-efficiency diesel vertical boiler with steel coil (stainless steel on request)

Easily connected to all Lavor cold water high pressure cleaners for hot water generation

4 twinned solid wheels to facilitate movement on any type of surface

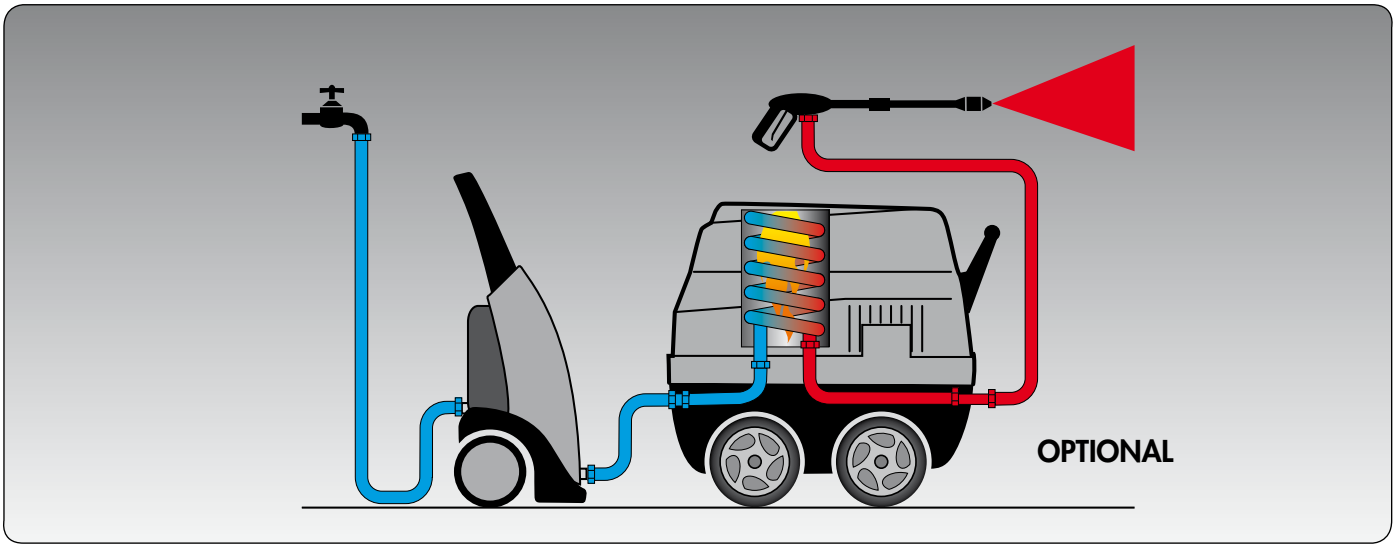

OPTIONAL

• 00080-02258 high presssure hose 3/8" ø 5/16" 10m, to connect any cold high pressure cleaner to the Vulcano.				

High-pressure nozzle

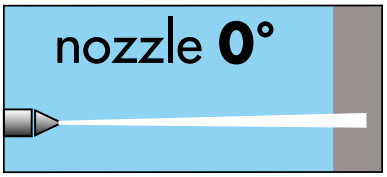

00080-03167	high-pressure nozzle 0.30
00080-03176	high-pressure nozzle 0.35
00080-03168	high-pressure nozzle 0.40
00080-03173	high-pressure nozzle 0.45
00080-03169	high-pressure nozzle 0.50
00080-03170	high-pressure nozzle 0.55
00080-03171	high-pressure nozzle 0.60
00080-03165	high-pressure nozzle 0.70
00080-03207	high-pressure nozzle 0.75
00080-03172	high-pressure nozzle 0.90

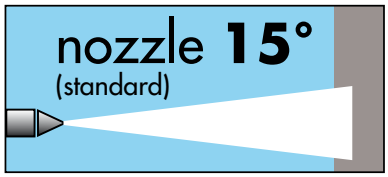

00080-03185	high-pressure nozzle 0.30
00080-03186	high-pressure nozzle 0.35
00080-03187	high-pressure nozzle 0.40
00080-03188	high-pressure nozzle 0.45
00080-03189	high-pressure nozzle 0.50
00080-03190	high-pressure nozzle 0.55
00080-03191	high-pressure nozzle 0.60
00080-03193	high-pressure nozzle 0.70
00080-03194	high-pressure nozzle 0.75
00080-03196	high-pressure nozzle 0.85

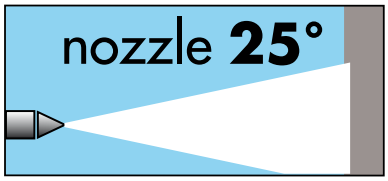

00080-03159	high-pressure nozzle 0.30
00080-03161	high-pressure nozzle 0.35
00080-03153	high-pressure nozzle 0.40
00080-03157	high-pressure nozzle 0.45
00080-03158	high-pressure nozzle 0.50
00080-03160	high-pressure nozzle 0.55
00080-03162	high-pressure nozzle 0.60
00080-03204	high-pressure nozzle 0.70
00080-03205	high-pressure nozzle 0.75
00080-03206	high-pressure nozzle 0.90

Turbo nozzle 280

Turbo nozzle 280 bar:
G 1/4"F brass

Extension for turbo nozzle:
1/4"M - 1/4"M code 00009-03342
+ coupling for gun M22 code 00009-03220

10001-10226	turbo nozzle - 0.45
10001-10250	turbo nozzle - 0.55
00080-03477	turbo nozzle - 0.70

Turbo nozzle 350/400

Turbo nozzle 350/400 bar:
G 1/4"F brass

Turbo nozzle 600

Turbo nozzle max 600 bar:
G 1/4"F stainless steel

00080-03419	turbo nozzle max 350 bar - 0.45
00080-03420	turbo nozzle max 350 bar - 0.55
00080-03416	turbo nozzle max 400 bar - 0.40
00080-03421	turbo nozzle max 400 bar - 0.45
00080-03422	turbo nozzle max 400 bar - 0.55
00080-03423	turbo nozzle max 600 bar - 0.45
00080-03424	turbo nozzle max 600 bar - 0.65

Extension for turbo nozzle:
1/4"M - 1/4"M code 00009-03342
+ coupling for gun M22 code 00009-03220

00080-03444	rotary nozzle max 500 bar - 0.40
00080-03445	rotary nozzle max 500 bar - 0.45
00080-03446	rotary nozzle max 500 bar - 0.50
00080-03447	rotary nozzle max 500 bar - 0.55
00080-03448	rotary nozzle max 500 bar - 0.60
00080-03449	rotary nozzle max 500 bar - 0.65
00080-03450	rotary nozzle max 500 bar - 0.70
00080-03416	rotary nozzle max 350 bar - 0.40

Rotary head nozzle

Rotary nozzle max 350/500 bar:
G 1/4"F with Stainless steel body and seat/ nozzle in highly shock-resistant tungsten carbide

Extension set for rotary nozzle:
1/4"M - 1/4"M codes 00009-03342 + 00009-03220 Spare coupling for gun M 22

Sand-blasting head

1) Sand-blasting heads max 250 bar, **are not** supplied with nozzles.
Orders will be always placed with the nozzle required.

Sand-blasting heads max 250 bar

00080-03451	Sand blasting head - blade type
00080-03452	Sand blasting head - round type
00080-03453	Sand blasting head - prolonged type

Sand-blasting nozzles

00080-03473	nozzle 0.40
00080-03472	nozzle 0.45
00080-03471	nozzle 0.50

2) Prolonged adjustable probe for sand-blasting

00069-00364	Stainless steel prolonged adjustable Ø 21 probe L = 500 mm

Magnetic Antiscale Stainless steel 3/4 F - 3/4 M

Magnetic Antiscale Stainless steel
The magnetic antiscale is a method that reduces the negative effects caused by high water hardness through the action of a magnetic field, offering itself as a non-chemical alternative for water softening.

00069-00217	Magnetic antiscale 3/4 F - 3/4 M

Gun with extensible telescopic lance

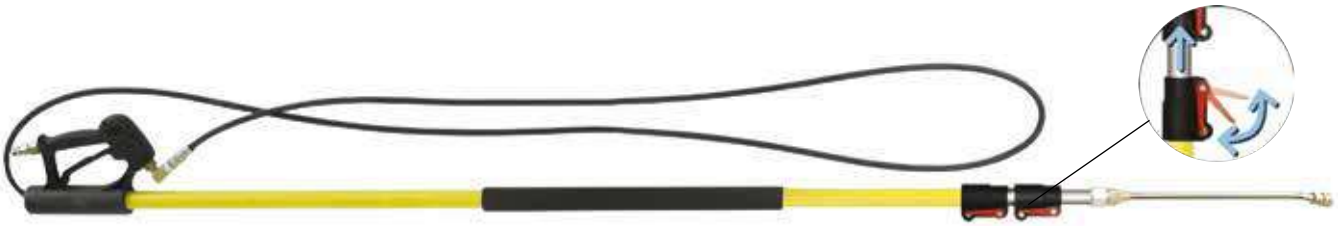

Adapters are required to connect the gun to a 3/8" hose cod. 10001-10196 + 00009-03156

With coupling for quick coupling nozzle (without nozzle)

Code	Pressure			Flow rate	Lenght		Coupling	Temperature
	bar	psi	MPa	l/m	min. mm	max. mm	A	°C
00080-01744	250	3625	25	30	198	549	fast	150

10001-08032	Belt support for telescopic lance

00080-01745	Curved lance set for gutters washing

Code	Description	Hole
00080-03425	Quick coupling **ceramic** nozzle 15°	035
00080-03426	Quick coupling **ceramic** nozzle 15°	04
00080-03427	Quick coupling **ceramic** nozzle 15°	045
00080-03428	Quick coupling **ceramic** nozzle 15°	05
00080-03429	Quick coupling **ceramic** nozzle 15°	055

High pressure inox lance

Code	Description
00080-03972	lance with nozzle holder 310 bar INOX 900 mm (without nozzle) M22-1/4"F
00080-03973	lance with nozzle holder 310 bar INOX 1200 mm (without nozzle) M22-1/4"F

Cold water high-pressure cleaner accessories

High pressure hose

	00080-02254	00080-02258	00080-02261	00080-02262	00080-02263	00080-02255	00080-02089	10002-04105	10002-04106	10002-04098
	8 m High pressure hose - 3/8" M22 - Ø 1/4" - 210 bar	10 m High pressure hose - 3/8" - Ø 5/16" - 310 bar	20 m High pressure hose - 3/8" - Ø 5/16" - 400 bar	20 m High pressure hose - 3/8" - Ø 3/8" - 400 bar	10 m High pressure hose for food industry - 3/8" - Ø 3/8" - 400 bar	10 m High pressure hose - 3/8" F F - Ø 3/8" R2	8 m High pressure hose - 1/4" M22 - Ø 1/4" 210 bar	10 m Extension high pressure hose	10 m Extension high pressure hose	20 m Extension high pressure hose
MYSTIC 1309 XP										
ALASKA 1409 XP										
HKA 1409 XP										
MAINE 1409 XP										
KAB 1408 LP										
KAB 1509 LP										
BOLT 1510 LP										
ARIZONA 1209 LP										
ARIZONA 1311 LP							•			
HA 1311 LP	•									
HA 1510 LP	•									
TUCSON 1211 LP	•						•			
TUCSON 1509 LP	•									
TUCSON 1713 LP		•	•	•	•					
TUCSON 2017 LP		•	•	•	•					
HNR 1509 LP		★	★	★	★					
HNR 1713 LP		★	★	★	★					
HNR 2017 LP		★	★	★	★					
TUCSON XL 2015 LP		•	•	•	•					
TUCSON XL 2021 LP		•	•	•	•					
TUCSON XL 2515 LP		•	•	•	•					
HNR XL 2015 LP		▲	▲	▲	▲					
HNR XL 2021 LP		▲	▲	▲	▲					
HNR XL 2515 LP		▲	▲	▲	▲					
COLUMBIA R 1211 LP										
COLUMBIA R 2015 LP		•	•	•	•	•				
HCR 1211 LP		▲	▲	▲	▲					
HCR 1515 LP		▲	▲	▲	▲					
HCR 2015 LP		▲	▲	▲	▲					
HCR 2021 LP		▲	▲	▲	▲					
HCR 2515 LP		▲	▲	▲	▲					
MCHPV 1211 LP		•	•	•	•					
MCHPV 1515 LP		•	•	•	•					
MCHPV 2015 LP		•	•	•	•					
MCHPV 2021 LP		•	•	•	•					
INDO 2521 E LP								•		
INDO 3518 E LP									•	
LENA 5015 E LP										•
LENA 5018 E LP										•
LENA 5021 E LP										•
LITE		•	•	•	•					
LITE PRO		•	•	•	•					
INDO 2030								•		
LENA 2042										
IRTYS 7015										
KCR 2015		▲	▲	▲	▲					
KCR 2021		▲	▲	▲	▲					
KCR 2515		▲	▲	▲	▲					

Turbo lance

	00080-02966	00080-02967	00080-02968	00080-02981	00080-02986	10002-04103	10002-04104	10002-04094	10002-04095	10002-04096
	Lance Turbo type 1 M22 - 0,45	Lance Turbo type 2 M22 - 0,55	Lance Turbo type 3 M22 - 0,70	Lance Turbo M22 - 0,35	Lance Turbo M22 - 0,30	Lance Turbo	Lance Turbo	Lance Turbo	Lance Turbo	Lance Turbo
MYSTIC 1309 XP				•						
ALASKA 1409 XP				•						
HKA 1409 XP				•						
MAINE 1409 XP				•						
KAB 1408 LP										
KAB 1509 LP										
BOLT 1510 LP					•					
ARIZONA 1209 LP	•									
ARIZONA 1311 LP	•									
HA 1311 LP	•									
HA 1510 LP					•					
TUCSON 1211 LP	•									
TUCSON 1509 LP					•					
TUCSON 1713 LP		•								
TUCSON 2017 LP	•									
HNR 1509 LP					•					
HNR 1713 LP		•								
HNR 2017 LP		•								
TUCSON XL 2015 LP	•									
TUCSON XL 2021 LP			•							
TUCSON XL 2515 LP	•									
HNR XL 2015 LP	•									
HNR XL 2021 LP					•					
HNR XL 2515 LP	•									
COLUMBIA R 1211 LP	•									
COLUMBIA R 2015 LP	•									
HCR 1211 LP	•									
HCR 1515 LP		•								
HCR 2015 LP	•									
HCR 2021 LP					•					
HCR 2515 LP	•									
MCHPV 1211 LP	•									
MCHPV 1515 LP		•								
MCHPV 2015 LP	•									
MCHPV 2021 LP					•					
INDO 2521 E LP						•				
INDO 3518 E LP							•			
LENA 5015 E LP								•		
LENA 5018 E LP									•	
LENA 5021 E LP										•
LITE	•									
LITE PRO	•									
INDO 2030										
LENA 2042										
IRTYS 7015										
KCR 2015	•									
KCR 2021					•					
KCR 2515	•									

Sand blasting lance

	00080-02957	00080-02958	00080-02959	10002-04107	10002-04108	10002-04100	10002-04101
	Widia sand-blasting lance M22 - 0,40	Widia sand-blasting lance M22 - 0,50	Widia sand-blasting lance M22 - 0,75	Sand-blasting lance	Sand-blasting lance	Sand-blasting lance	Sand-blasting lance
MYSTIC 1309 XP	•						
ALASKA 1409 XP	•						
HKA 1409 XP	•						
MAINE 1409 XP	•						
KAB 1408 LP							
KAB 1509 LP							
BOLT 1510 LP	•						
ARIZONA 1209 LP	•						
ARIZONA 1311 LP	•						
HA 1311 LP	•						
HA 1510 LP	•						
TUCSON 1211 LP	•						
TUCSON 1509 LP							
TUCSON 1713 LP		•					
TUCSON 2017 LP		•					
HNR 1509 LP	•						
HNR 1713 LP		•					
HNR 2017 LP		•					
TUCSON XL 2015 LP	•						
TUCSON XL 2021 LP			•				
TUCSON XL 2515 LP	•						
HNR XL 2015 LP	•						
HNR XL 2021 LP			•				
HNR XL 2515 LP	•						
COLUMBIA R 1211 LP	•						
COLUMBIA R 2015 LP	•						
HCR 1211 LP	•						
HCR 1515 LP		•					
HCR 2015 LP	•						
HCR 2021 LP			•				
HCR 2515 LP	•						
MCHPV 1211 LP	•						
MCHPV 1515 LP							
MCHPV 2015 LP	•						
MCHPV 2021 LP			•				
INDO 2521 E LP				•			
INDO 3518 E LP					•		
LENA 5015 E LP						•	
LENA 5018 E LP							•
LENA 5021 E LP							•
LITE	•						
LITE PRO	•						
INDO 2030				•			
LENA 2042							
IRTYS 7015							
KCR 2015	•						
KCR 2021			•				
KCR 2515	•						

• = Suitable ★ = Suitable (not on hose reels) ▲ = Suitable (with adapter 00009-02101)

Hot water high-pressure cleaner accessories

High pressure hose

	00080-02258	00080-02261	00080-02262	00080-02263	00080-02264	00080-02222				
	10 m High pressure hose - 3/8" - Ø 5/16" - 310 bar	20 m High pressure hose - 3/8" - Ø 5/16" - 400 bar	20 m High pressure hose - 3/8" - Ø 3/8" - 400 bar	10 m High pressure hose for food industry - 3/8" - Ø 3/8" - 400 bar	10 m High pressure hose - 3/8" F F - Ø 3/8" R2	10 m High pressure hose - 3/8" - Ø 5/16" - R1 310 bar				
DARWIN 1310 XP										
DARWIN PLUS 1310 XP										
DARWIN PRO 1310 LP										
DAKOTA R2 1310 XP										
NPX 1211 XP	•	•			•					
NPX 1813 XP	•	•			•					
TEXAS R2 1211										
TEXAS R2 1509	•	•			•					
TEXAS R2 1811	•	•			•					
HSR 1509 LP	▲	▲	▲	▲	▲					
LKX 1310 LP	•	•			•					
LKX 1515 LP	•	•			•					
LKX 2015 LP	•	•	•	•	•					
HLR 1211 LP	▲	▲	▲	▲	▲					
HLR 1510 LP	▲	▲	▲	▲	▲					
HLR 1614 LP	▲	▲	▲	▲	▲					
HLR 1515 LP	▲	▲	▲	▲	▲					
HLR 2015 LP	▲	▲	▲	▲	▲					
HLR 2021 LP	▲	▲	▲	▲	▲					
TEKNA 2015 LP	•	•	•	•	•					
TEKNA 2021 LP			•	•	•					
HTR 2015 LP	▲	▲	▲	▲	▲					
HTR 2021 LP	▲	▲	▲	▲	▲					
HTR 2515 LP	▲	▲	▲	▲	▲					
HMR 2015 LP	▲	▲	▲	▲	▲					
HMR 1521 LP	▲	▲	▲	▲	▲					
HMR 2021 LP	▲	▲	▲	▲	▲					
HHPV 1211 LP	▲	▲	▲	▲	▲					
HHPV 2015 LP	▲	▲	▲	▲	▲					
HHPV 2021 LP	▲	▲	▲	▲	▲					
HHPX 1211 LP	▲	▲	▲	▲	▲					
HHPX 2015 LP	▲	▲	▲	▲	▲					
HHPX 2021 LP	▲	▲	▲	▲	▲					
KANSAS 2.0 1510 LP	▲	▲	▲	▲	▲					
KANSAS 2.0 1512 LP	▲	▲	▲	▲	▲					
KANSAS 2.0 1710 LP	▲	▲	▲	▲	▲					
KANSAS 2.0 1912 LP	▲	▲	▲	▲	▲					

Turbo lance

	00080-02966	00080-02967	00080-02968	00080-02981	00080-02986					
	Lance Turbo type 1 M22 - 0,45	Lance Turbo type 2 M22 - 0,55	Lance Turbo type 3 M22 - 0,70	Lance Turbo M22 - 0,35	Lance Turbo M22 - 0,30					
DARWIN 1310 XP										
DARWIN PLUS 1310 XP										
DARWIN PRO 1310 LP										
DAKOTA R2 1310 XP										
NPX 1211 XP	•									
NPX 1813 XP	•									
TEXAS R2 1211										
TEXAS R2 1509										
TEXAS R2 1811										
HSR 1509 LP					•					
LKX 1310 LP	•									
LKX 1515 LP		•								
LKX 2015 LP	•									
HLR 1211 LP	•									
HLR 1510 LP					•					
HLR 1614 LP					•					
HLR 1515 LP		•								
HLR 2015 LP	•									
HLR 2021 LP			•							
TEKNA 2015 LP	•									
TEKNA 2021 LP			•							
HTR 2015 LP	•									
HTR 2021 LP			•							
HTR 2515 LP	•									
HMR 2015 LP										
HMR 1521 LP										
HMR 2021 LP										
HHPV 1211 LP	•									
HHPV 2015 LP		•								
HHPV 2021 LP			•							
HHPX 1211 LP	•									
HHPX 2015 LP		•								
HHPX 2021 LP			•							
KANSAS 2.0 1510 LP				•						
KANSAS 2.0 1512 LP	•									
KANSAS 2.0 1710 LP				•						
KANSAS 2.0 1912 LP	•									

Sand blasting lance

	00080-02957	00080-02958	00080-02959				
	Widia sand-blasting lance M22 - 0,40	Widia sand-blasting lance M22 - 0,50	Widia sand-blasting lance M22 - 0,75				
DARWIN 1310 XP							
DARWIN PLUS 1310 XP							
DARWIN PRO 1310 LP							
DAKOTA R2 1310 XP							
NPX 1211 XP	•						
NPX 1813 XP	•						
TEXAS R2 1211							
TEXAS R2 1509							
TEXAS R2 1811							
HSR 1509	•						
LKX 1310 LP	•						
LKX 1515 LP		•					
LKX 2015 LP	•						
HLR 1211 LP	•						
HLR 1510 LP	•						
HLR 1614 LP	•						
HLR 1515 LP		•					
HLR 2015 LP	•						
HLR 2021 LP			•				
TEKNA 2015 LP	•						
TEKNA 2021 LP			•				
HTR 2015 LP	•						
HTR 2021 LP			•				
HTR 2515 LP	•						
HMR 2015 LP							
HMR 1521 LP							
HMR 2021 LP							
HHPV 1211 LP	•						
HHPV 2015 LP		•					
HHPV 2021 LP			•				
HHPX 1211 LP	•						
HHPX 2015 LP		•					
HHPX 2021 LP			•				
KANSAS 2.0 1510 LP	•						
KANSAS 2.0 1512 LP		•					
KANSAS 2.0 1710 LP	•						
KANSAS 2.0 1912 LP	•						

• = Suitable ▲ = Suitable (with adapter 00009-02101)

Water flow adjuster coupling

Code	Inlet	Outlet	Max. pressure			Max flow rate		Max temperature	
	A	B	bar	psi	MPa	l/m	GPM	°C	°F
00009-03124	M22 Ø14	M22F Ø14	280	4061	28	30	7.93	160	320
00009-03125	1/4" M	M22F Ø14	280	4061	28	30	7.93	160	320
00009-03123	1/4" M	1/4" F	280	4061	28	30	7.93	160	320

High-pressure cleaner with combustion engine accessories

High pressure hose

	00080-02258	00080-02261	00080-02262	00080-02263	00080-02264	10002-04098	10002-04099	10002-04106		
	10 m High pressure hose - 3/8" - Ø 5/16" - 310 bar	20 m High pressure hose - 3/8" - Ø 5/16" - 400 bar	20 m High pressure hose - 3/8" - Ø 3/8" - 400 bar	10 m High pressure hose for food industry - 3/8" - Ø 3/8" - 400 bar	10 m High pressure hose - 3/8" F F - Ø 3/8" R2	20 m Extension high pressure hose	20 m Extension high pressure hose	10 m Extension high pressure hose		
THERMIC 5.1H										
THERMIC 2W LITE 6L										
THERMIC 2W LITE 13L										
THERMIC 6,5					•					
THERMIC 9.1 L	•	•			•					
THERMIC 10.1 D	▲	▲	▲	▲	▲					
THERMIC 2W 9H										
THERMIC 2W 13L										
THERMIC 2W 13H										
THERMIC 2W PRO 13 L										
THERMIC 2W PRO 13 H										
THERMIC 13 H/13 HF	▲	▲	▲	▲	▲					
THERMIC 18 3518 BS								•		
THERMIC 22 3521 H							•			
THERMIC 22 4018 H						•				
THERMIC 22 5015 H						•				
THERMIC 26 3523 K							•			
THERMIC 26 4020 K						•				
THERMIC 26 5016 K						•				
THERMIC 22 2730							•			
THERMIC 31 7015										
THERMIC 26 7013										
THERMIC 10.1 HW	▲	▲	▲	▲	▲					
THERMIC 26 HW 2523										
THERMIC 26 HW 3518										
THERMIC 26 HW2030										

Turbo lance

	00080-02966	00080-02967	00080-02968	00080-02981	10002-03408	10002-04097	10002-04096	10002-04094	10002-04104	10002-04150
	Lance Turbo type 1 M22 - 0,45	Lance Turbo type 2 M22 - 0,55	Lance Turbo type 3 M22 - 0,70	Lance Turbo M22 - 0,35	Lance Turbo	Lance Turbo	Lance Turbo	Lance Turbo	Lance Turbo	Lance Turbo
THERMIC 5.1H				•						
THERMIC 2W LITE 6L										
THERMIC 2W LITE 13L										
THERMIC 6,5				•						
THERMIC 9.1 L	•									
THERMIC 10.1 D		•								
THERMIC 2W 9H										
THERMIC 2W 13L										
THERMIC 2W 13H										
THERMIC 2W PRO 13 L					•					
THERMIC 2W PRO 13 H					•					
THERMIC 13 H/13 HF	•									
THERMIC 18 3518 BS									•	
THERMIC 22 3521 H						•				
THERMIC 22 4018 H							•			
THERMIC 22 5015 H								•		
THERMIC 26 3523 K						•				
THERMIC 26 4020 K										•
THERMIC 26 5016 K								•		
THERMIC 22 2730						•				
THERMIC 31 7015										
THERMIC 26 7013										
THERMIC 10.1 HW										
THERMIC 26 HW 2523										
THERMIC 26 HW 3518										
THERMIC 26 HW2030										

Sand blasting lance

	00080-02957	00080-02958	00080-02959	10002-04102	10002-04101	10002-04100	10002-04108
	Widia sand-blasting lance M22 - 0,40	Widia sand-blasting lance M22 - 0,50	Widia sand-blasting lance M22 - 0,75	Sand-blasting lance	Sand-blasting lance	Sand-blasting lance	Sand-blasting lance
THERMIC 5.1H	•						
THERMIC 2W LITE 6L							
THERMIC 2W LITE 13L							
THERMIC 6,5							
THERMIC 9.1 L	•						
THERMIC 10.1 D		•					
THERMIC 2W 9H							
THERMIC 2W 13L							
THERMIC 2W 13H							
THERMIC 2W PRO 13 L							
THERMIC 2W PRO 13 H							
THERMIC 13 H/13 HF		•					
THERMIC 18 3518 BS							•
THERMIC 22 3521 H				•			
THERMIC 22 4018 H					•		
THERMIC 22 5015 H						•	
THERMIC 26 3523 K							
THERMIC 26 4020 K							
THERMIC 26 5016 K							
THERMIC 22 2730				•			
THERMIC 31 7015							
THERMIC 26 7013							
THERMIC 10.1 HW							
THERMIC 26 HW 2523							
THERMIC 26 HW 3518							
THERMIC 26 HW2030							

• = Suitable ▲ = Suitable (with adapter 00009-02101)

Adapters for high pressure hoses

3/8" M 3/8" M

Code: 00009-03156

3/8" M M 22

Code: 00009-02848

1/4" M M 22

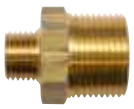

Code: 00009-02575

3/8" M M 22 F

Code: 00009-02101

Quick coupling kit hose/gun

Quick coupling kit hose/gun – brass - inlet 3/8" F - outlet 3/8" M - 200 bar
Code: 10001-10196

Quick coupling kit hose/gun – inlet 3/8" F - outlet 3/8" M - 250 bar
Code: 10001-09948

Quick coupling kit hose/gun – brass - inlet 1/4" F - outlet 1/4" M - 200 bar
Code: 10001-10195

Accessories High-pressure cleaners

Code	Description
00080-01691	Gun RL 30 3/8"M - 1/4"F (only for lance 00080-02975 - 00080-02976)
00080-02975	mm 1700 Stainless steel 1/4"M - 1/8"F high/low press. (for det. suction) for gun 00080-01691
00080-02976	mm 1700 Stainless steel 1/4"M - 1/8"F lance with nozzle-holder - for gun 00080-01691

Food industry high pressure accessories

For food industry

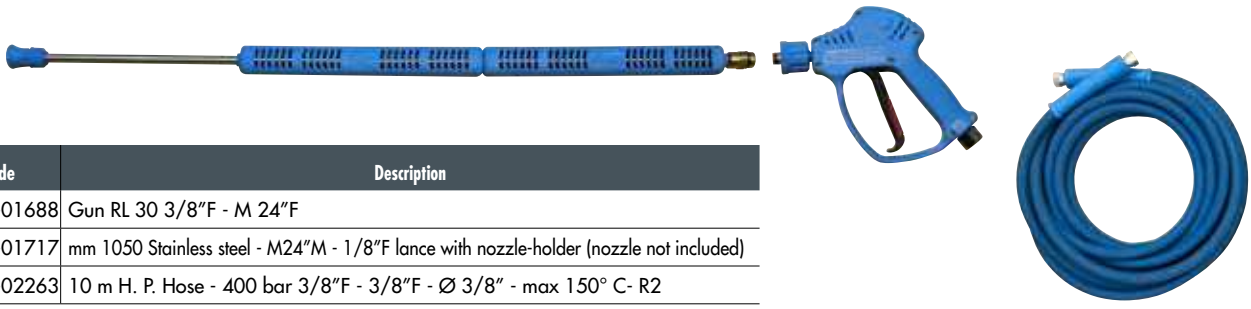

Code	Description
00080-01688	Gun RL 30 3/8"F - M 24"F
00080-01717	mm 1050 Stainless steel - M24"M - 1/8"F lance with nozzle-holder (nozzle not included)
00080-02263	10 m H. P. Hose - 400 bar 3/8"F - 3/8"F - Ø 3/8" - max 150° C- R2

Steam hose R2 with rubber hose bend Ø 3/8"

For food industry

Code	Max. pressure			Length	Inlet	Outlet	Max. temperature
	bar	psi	MPa	m			°C
00080-02264	400	5801	40	10	3/8"F	3/8"F	135

Wall mount hose reel

Wall mount hose reel with brakets without hose (capability 20 m hose 3/8")

Code	Description	Inlet	Outlet
10001-10252	Wall mount hose reel with brakets without hose	3/8"F	3/8"F

Automatic hose reel

Automatic hose reel (capability 20 m hose)

Code	Description	Inlet	Outlet
00080-03964	Varnished steel automatic hose reel	3/8"M	3/8"F
00080-03966	Stainless steel automatic hose reel	3/8"M	3/8"F
00080-03965	Varnished steel automatic hose reel with 20mt hose	3/8"F	3/8"F

Double lance

Double lance mm 500 with regulator knob max 250 bar
Double lance mm 500 with regulator knob max 250 bar with nozzle holder

00080-01722	Double lance with regulator mm 500

Foam lance

Foam lance max 250 bar
Foam lance max temperature 90° C.
For gun M 22 max 250 bar

00080-02942	Foam lance
00080-02945	Foam lance with tank 1 lt.

Foam lance with regulator

Foam lance with regulator max 180 bar
Foam lance with regulator max temp. 60° C - with M22 coupling

00080-02980	Foam lance

Foam lance with regulator

Foam lance max 180 bar with tank 1 lt.
Foam lance with regulator max temp. 60° C - with M22 coupling

00080-02978	Foam lance with tank 1 lt.

Water filter 3/4 F - 3/4 M

Water filter
Water filter - 3/4 F - 3/4 M
80 micron

00070-00479	Water filter

Water filter G 1/2 F - G 1/2 F

Water filter
Water filter - G 1/2 F - G 1/2 F

00070-00374	Plastic water filter
00070-00095	Cartridge

Calibrated sand

Calibrated sand
Calibrated sand - 1 piece of 5 kg

00075-00005	Calibrated sand (1 x 5 kg)

Kit pipe cleaning hose with nozzle

Code	Description	Length	Max. pressure			Inlet	Outlet
		m	bar	psi	MPa		
10001-10239	Kit pipe cleaning hose	10	210	3045	21	M 22 - M	Stainless steel nozzle
10001-10231	Kit pipe cleaning hose	20	210	3045	21	M 22 - M	Stainless steel nozzle

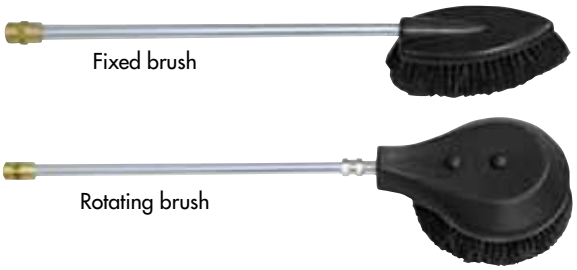

Fixed and rotating brushes

Fixed and rotating brushes max 250 bar: mm 700, max temperature 90° C, for gun M 22

00080-04389	Fixed brush with extension pipe mm 700
00080-04390	Rotating brush with extension pipe mm 700

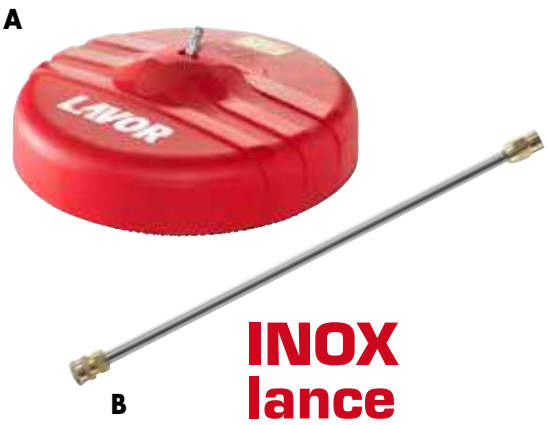

Floor Cleaning Lance for gun M 22

A - *Patio cleaner* L 38

Code	Pressure		Flow rate		Inlet	Weight	Temperature	
	bar	psi	l/h	GPM		Kg	°C	°F
00080-04221	200	1900	680	3	AR1	1,6	60	140

B - *Stainless steel extension*

Code	Inlet	Outlet	Length	Weight
00080-04041	M22x1,5 M	AR1	500 mm	350 g.

Professional surface cleaner lances for guns with M22 connection

Patio cleaner 355 x355 mm

Code	Pressure		Flow rate		Inlet	Weight	Temperature	
	bar	psi	l/h	GPM		Kg	°C	°F
00080-04070	200	1900	900	4	M22	3,62	60	140

Motorized head

for Thermic 13H
and Thermic 17 HW
in combination with M24 nipple
cod. 00009-03218

- Stainless steel motorized head for case and tank cleaning
- Complete orbital internal coverage
- Complete with nozzles and converter

Motorized head	
code	00080-03443
operat. pressure	220 bar - 3190 psi
allowed pressure	250 bar - 3625 psi
operat. delivery rate	1260 l/h - 5,56 GPM
nominal temperature	90° C
min. diameter	Ø 40 mm
nozzle type	2 x M4

Floor Cleaning Lance

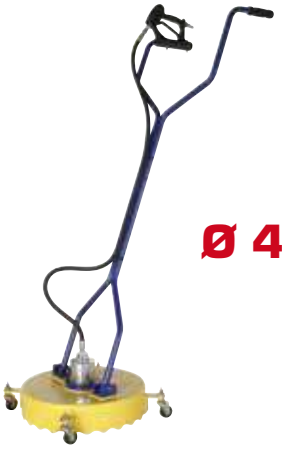

Ø 460 mm

- Heavy duty polypropylene floor cleaning lance (nozzle included)
- Complete with RL 35 gun
- For washing terraces and external floors in general.

Floor Cleaning Lance 460	
code	00080-05164
operat. pressure	250 bar - 3625 psi
allowed pressure	280 bar - 4060 psi
operat. delivery rate	2400 l/h - 7 GPM
nominal temperature	82° C

for Thermic 13H and Thermic 17 HW in combination with M24 nipple cod. 00009-03218

Floor Cleaning Lance

Ø 510 mm
INOX

- Stainless steel floor cleaning lance (nozzle included)
- Complete with RL 35 gun
- For washing terraces and external floors in general.

Floor Cleaning Lance 510	
code	00080-04580
operat. pressure	250 bar - 3625 psi
allowed pressure	280 bar - 4060 psi
operat. delivery rate	1800 l/h - 5,3 GPM
nominal temperature	82° C

for Thermic 13H and Thermic 17 HW in combination with M24 nipple cod. 00009-03218

Pipe cleaning nozzles

Code	Description	Thread	Type
00080-03174	Pipe cleaning nozzle with side holes	3/8"M	0.55
00080-03242	Rounded head pipe cleaning nozzle	3/8"M	0.55
00080-03243	Pipe cleaning nozzle with side holes	3/8"F	0.55
00080-03255	Pipe cleaning nozzle with side holes	1/4"F	0.55

More than 45 years of constructive experience...

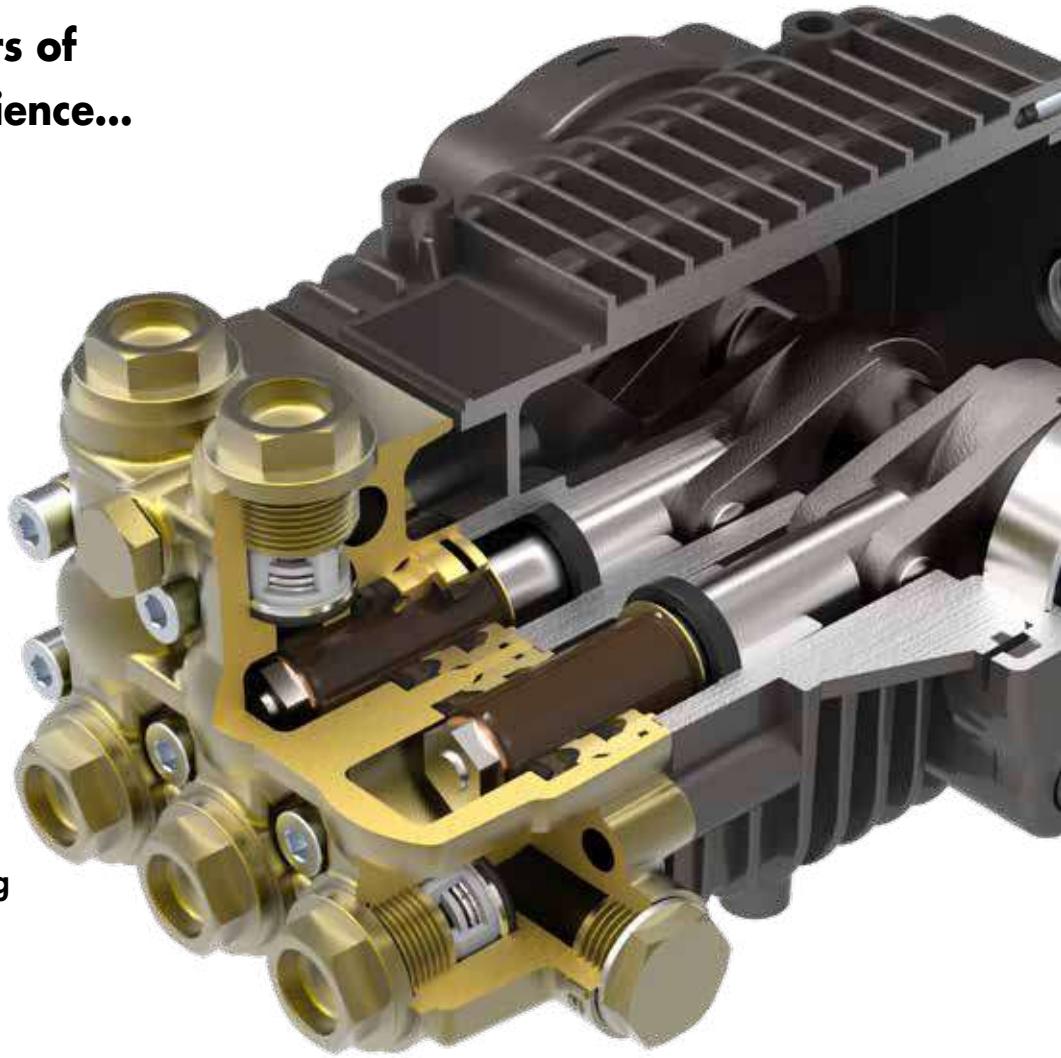

Lavor offers a comprehensive range of pumps and motor pumps constructed and designed to meet any requirement of the market, providing a long-lasting and reliable solution to address cleaning needs...

No compromises!

Lavor offering of pumps and motor pumps intentionally targets a clientèle seeking top quality and durability for this kind of products:

• 4-pole motors: They assure 1400 RPM speed, resulting in a decrease of pump and motor's operating temperatures, reduction in wear of consumables, lower oil deterioration inside the pump.

• Water cooled motors: Enhanced effectiveness and lower operating temperatures translate into compact sizes and high performance.

• Elastic coupling: it assures better alignment, dissipation of the heat from the motor rotor, lower stress on bearings, easy disassembly of the pump from the motor.

• Pump body in die cast aluminium: the casing design focuses on assuring stress is reduced to

the minimum and operating temperatures are reduced, with the aim of guaranteeing unlimited service life.

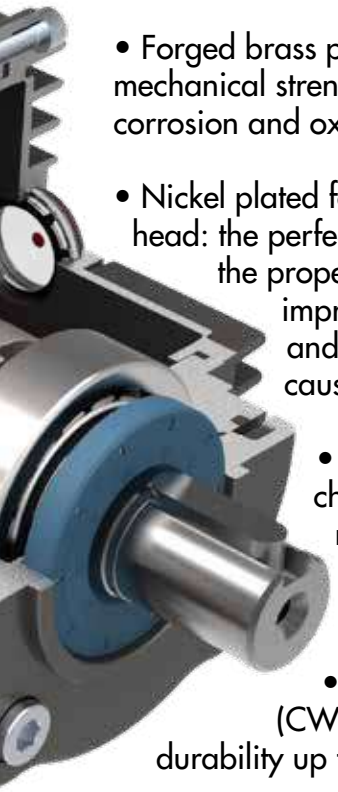

• Forged brass pump head: improved mechanical strength, superior resistance to corrosion and oxidation phenomena.

• Nickel plated forged brass (CW6) pump head: the perfect surface finish, jointly with the properties of the plating, assure improved resistance to chemicals and lower chance of deterioration caused by cavitation phenomena.

• Double gasket seal system the choice of the "U" gasket profile represents the maximum quality standard, assuring lower wear due to friction.

• High temperature seals (CW6): They assure optimal durability up to 85° operation.

• Valves with stainless steel plate and spherical seal: high fluid dynamics performance.

• Ceramic pistons (according to the models): to assure longer service life of the pistons and guarantee lower wear of water seals and improved resistance to thermal shocks.

• Double housing connecting rods (CL6-CW 6): ease of maintenance.

• **"READY TO USE"** pumps (CL3.5): This range provides built-in by-pass valve, low pressure detergent injector, total stop actuation micro-switch, pressure regulation and pressure gauge, making installation easier and speeding up replacement and maintenance operations.

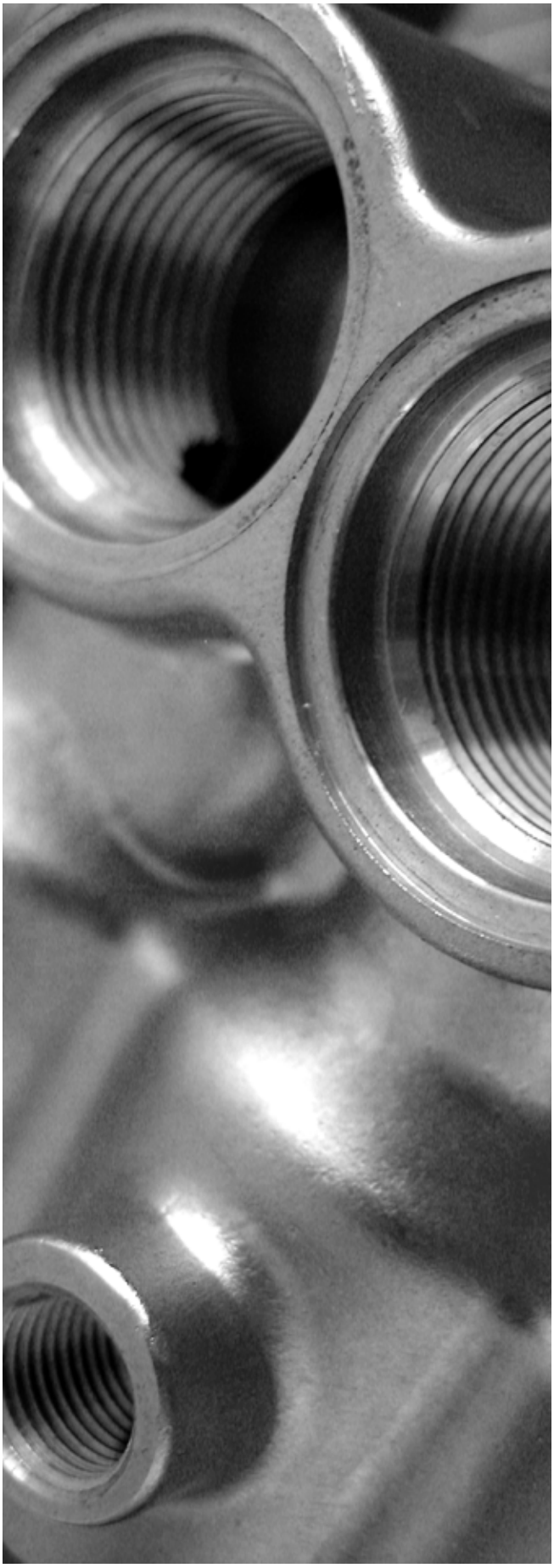

Pumps and electropumps

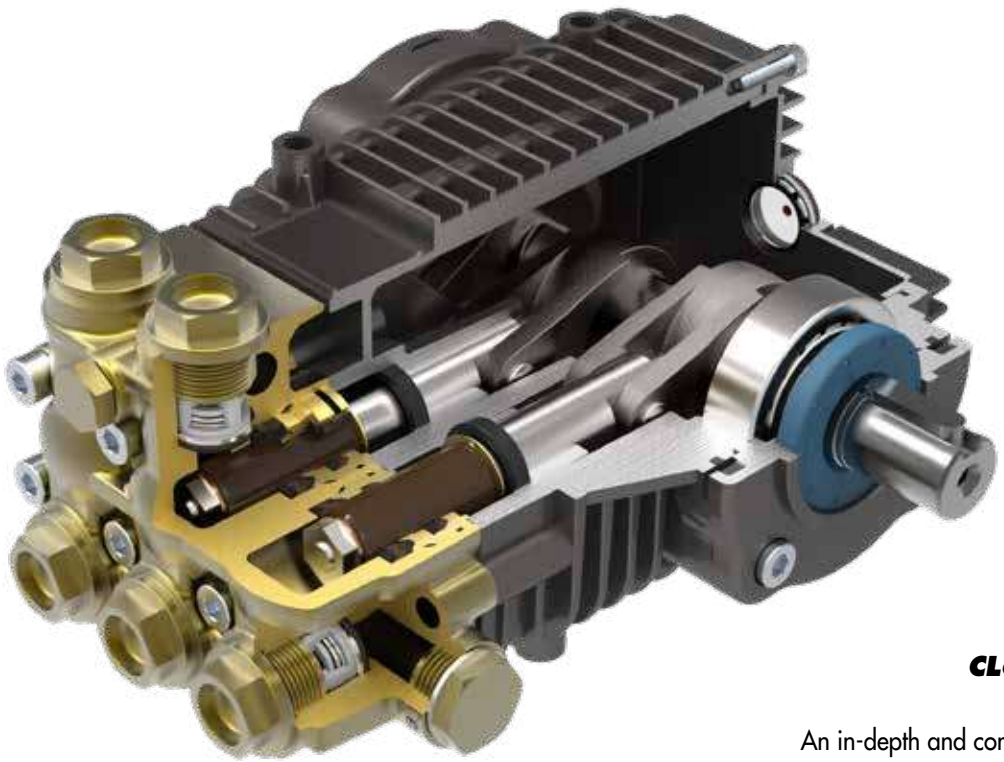

CL6 21-200

An in-depth and comparative study on each structural element • Low wear and tear ceramic pistons • Low friction connecting rod, built in aluminium alloy; double body for easy disassembly • Minimum charge on the cone-shaped bearings (through electronic calibration of the drive shaft rotation) • Very low operating temperature, favored by the use of water cooled motor • Top range up to 21 l/min.

Model	Omnia 12	Omnia 15	CL3	CL3.5	CL6	CW6
Pump type	Axial	Axial	Linear	Linear	Linear	Linear
Head	Brass	Brass	Brass	Brass	Brass	Brass nickel plated
Pistons	Stainless steel	Ceramic coated	Ceramic coated	Ceramic	Ceramic	Ceramic
Pistons Ø	12 mm	15 mm	15 mm	18 mm	20 mm	20 mm
By-pass valve	Integrated	Integrated	Integrated	Integrated	Separated	Separated
Pressure regulator	Integrated	Integrated	Integrated	Integrated	On by-pass	On by-pass
Max operating pressure	140 bar	200 bar	200 bar	200 bar	200 bar	200 bar
Max delivery rate	9 l/min	13 l/min	13 l/min	17 l/min	21 l/min	21 l/min
Motor	2 poles air cooled	2 poles air cooled	4 poles air/ H_2O	4 poles air/ H_2O	4 poles H_2O cooled	4 poles H_2O cooled
Total Stop	Available	Available	Available	Available	Available	Available

CL3 series

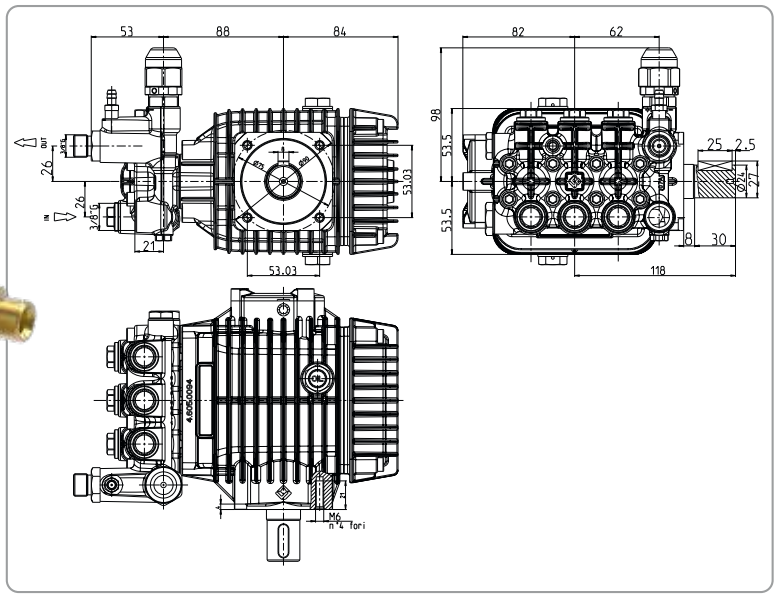

Equipped with:

• Pressure adjuster included

Model	Right shaft ver.	Left shaft ver.	RPM		Max. pressure			Flow rate				Requested power				Weight	
	Code	Code			bar	psi	MPa	l/m		GPM		HP		kW		kg	lbs
CL 34-15 9-200	on request	31049-00016	1450	1750	200	2900	20	9	11	2.4	2.9	4,9	6	3,6	4,4	6,6	14,5
CL 34-15 11-200	on request	31049-00017	1450	1750	200	2900	20	11	13	2.9	3.5	6	6,5	4,4	4,8	6,6	14,5

CL3.5 series

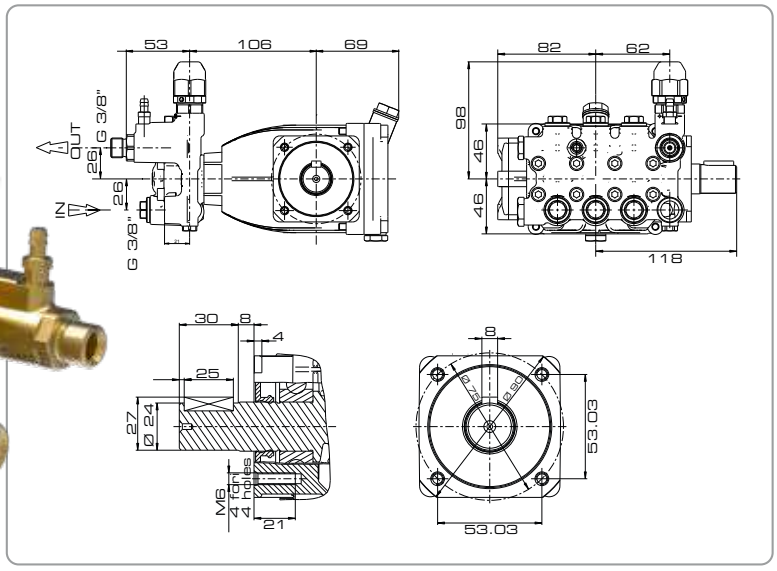

Equipped with:

• Pressure adjuster included

Model	Right shaft ver.	Left shaft ver.	RPM		Max. pressure			Flow rate				Requested power				Weight	
	Code	Code			bar	psi	MPa	l/m		GPM		HP		kW		kg	lbs
CL 354-18 15-200	on request	on request	1450	1750	200	2900	20	15	18	4	4.7	7,5	9,2	5,5	6,9	7	15,4

CL6 series

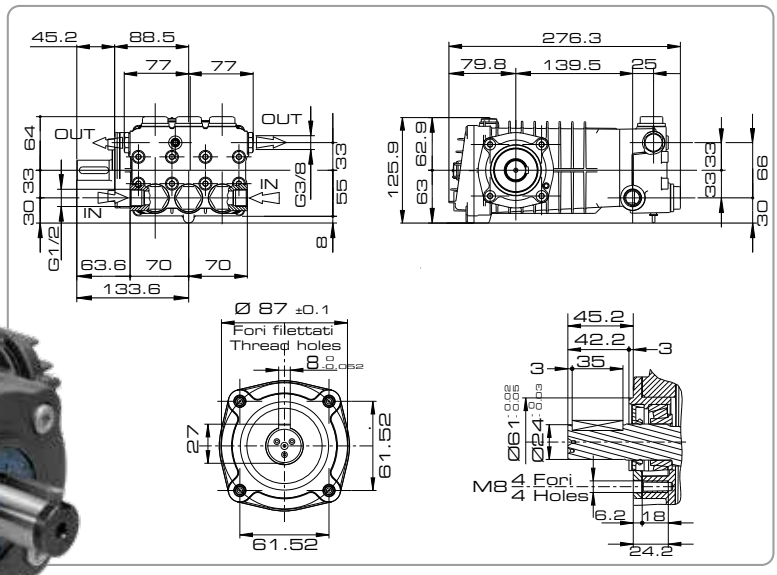

Model	Left shaft ver.	RPM		Max. pressure			Flow rate				Requested power				Weight	
	Code			bar	psi	MPa	l/m		GPM		HP		kW		kg	lbs
CL 64-20 15-200	10001-10118	1450	1750	200	2900	20	15	18	4	4.7	7,5	9,2	5,5	6,9	9,8	21,6
CL 64-20 21-200	10001-10120	1450	1750	200	2900	20	21	25	5.5	6.6	10,5	12,8	7,7	9,5	9,8	21,6

CW6 series
(Nickel plated CL6)

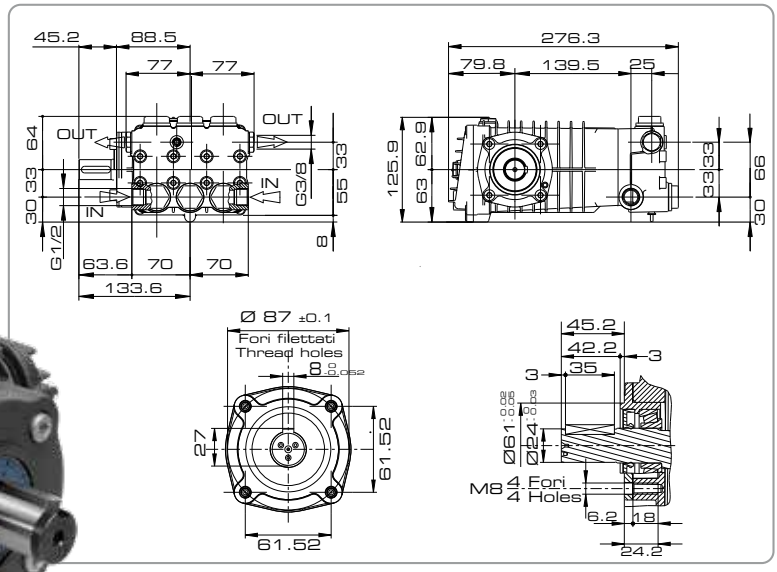

Model	Left shaft ver.	RPM		Max. pressure			Flow rate				Requested power				Weight	
	Code			bar	psi	MPa	l/m		GPM		HP		kW		kg	lbs
CW 54-20 15-200	10001-10127	1450	1750	200	2900	20	15	18	4	4.7	7,5	9,2	5,5	6,9	9,8	21,6
CW 54-20 21-200	10001-10129	1450	1750	200	2900	20	21	25	5.5	6.6	10,5	12,8	7,7	9,5	9,8	21,6

MPBX1 series
(Omnia 12 Pump)

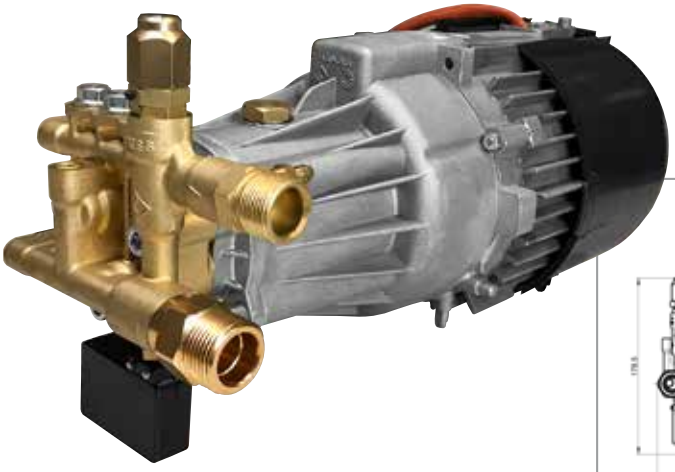

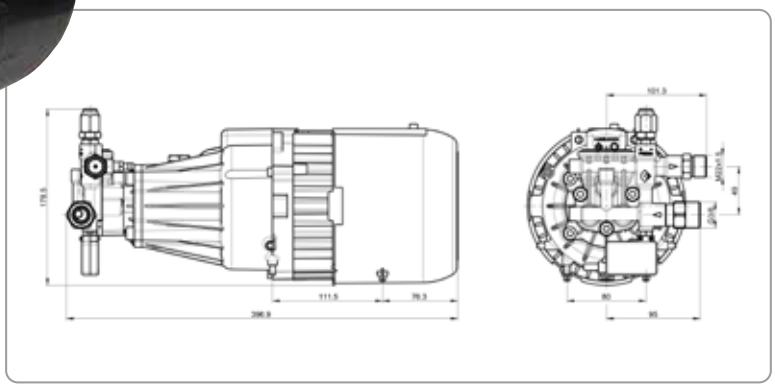

Equipped with:

- High-pressure motor pumps units
- Fixing bracket included

Model	Left shaft ver.	RPM	Max. pressure			Flow rate		Requested power	Power supply	Weight	
	Code		bar	psi	MPa	l/m	GPM	kW		kg	lbs
MPBX 1-12 9-140	on request	2800	140	2030	14	9	2.37	2.8	1 Ph 230V~50Hz	13	28,6
MPBX 1-12 9-140	on request	3400	140	2030	14	9	2.37	2.8	1 Ph 220V~60Hz	13	28,6

MPBX2 series
(Omnia 15 Pump)

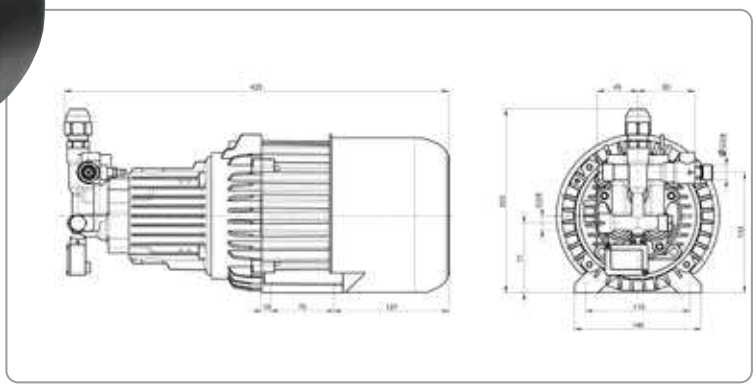

Equipped with:

- High-pressure motor pumps units
- Fixing bracket included

Model	Left shaft ver.	RPM	Max. pressure			Flow rate		Requested power	Power supply	Weight	
	Code		bar	psi	MPa	l/m	GPM	kW		kg	lbs
MPBX 2-15 13-180	on request	2800	180	2610	18	13	3.4	4	3Ph 400V~50Hz	21	46,2

MP3 series

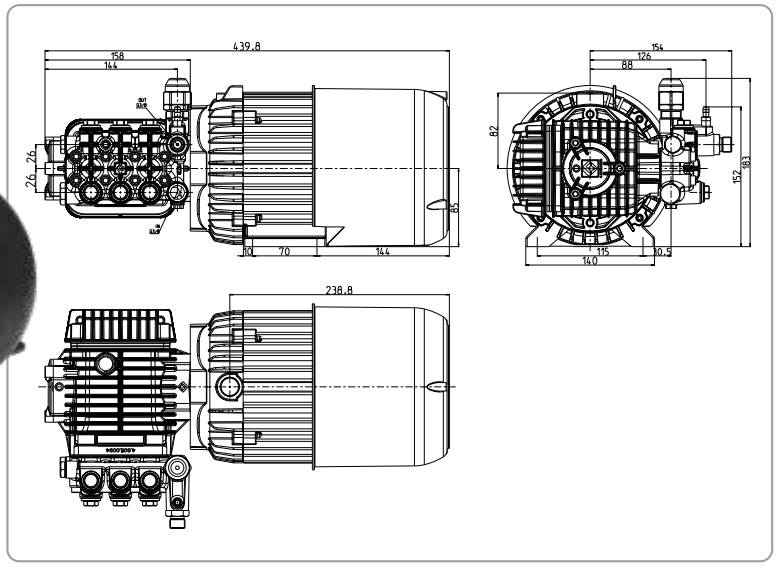

Equipped with:

- Pressure adjuster included

Model	Left shaft ver.	RPM	Max. pressure			Flow rate		Requested power	Power supply	Weight	
	Code		bar	psi	MPa	l/m	GPM	kW		kg	lbs
MP 34-15 11-120	34004-00068	1450	120	1740	12	11	2,9	3	1Ph 230V~50Hz	22	49,2
MP 34-15 11-120	34004-00069	1750	120	1740	12	11	2,9	3	1Ph 220V~60Hz	22	49,2
MP 34-15 11-150	34004-00070	1450	150	2175	15	11	2,9	4	3Ph Y 400V~50Hz	22,5	49,6
MP 34-15 11-150	34004-00071	1750	150	2175	15	11	2,9	4	3Ph Y 400V~60Hz	22,5	49,6

MPJ3 series

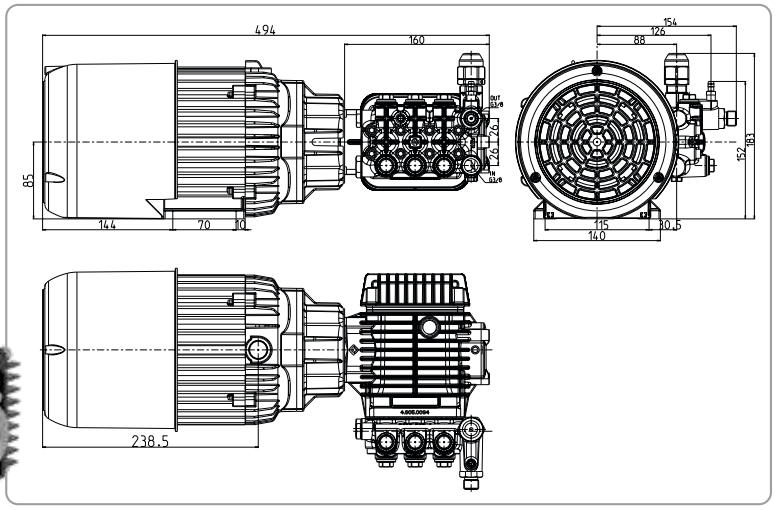

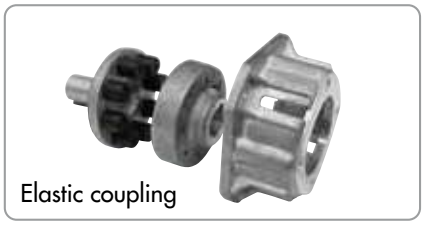
Elastic coupling

Equipped with:

- High-pressure pumps units with elastic coupling
- Pressure adjuster included

Model	Left shaft ver.	RPM	Max. pressure			Flow rate		Requested power	Power supply	Weight	
	Code		bar	psi	MPa	l/m	GPM	kW		kg	lbs
MPJ 34-15 11-120	34004-00072	1450	120	1740	12	11	2,9	3	1Ph 230V~50Hz	22,5	49,6
MPJ 34-15 11-120	34004-00073	1750	120	1740	12	11	2,9	3	1Ph 220V~60Hz	22,5	49,6
MPJ 34-15 15-150	34004-00074	1450	150	2175	15	11	2,9	4	3Ph Y 400V~50Hz	23	50,6
MPJ 34-15 15-150	34004-00075	1750	150	2175	15	11	2,9	4	3Ph Y 400V~60Hz	23	50,6

MPW3.5 series

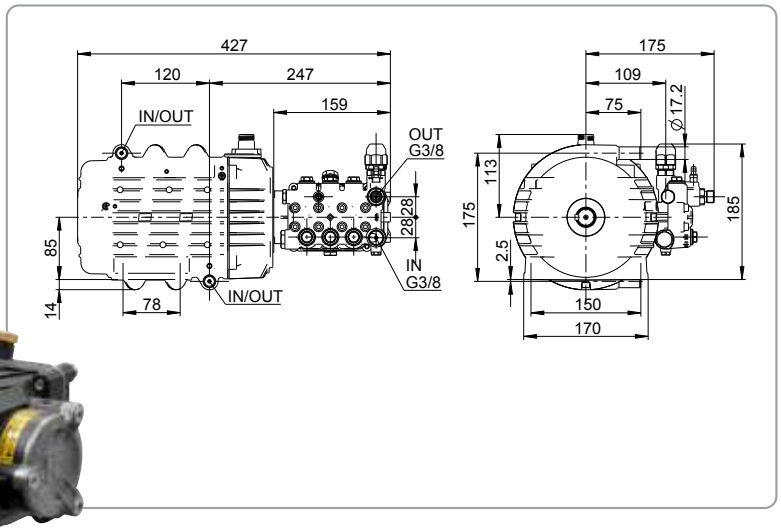

Equipped with:

- Fixing bracket included
- Pressure adjuster included

Model	Left shaft ver.	RPM	Max. pressure			Flow rate		Requested power	Power supply	Weight	
	Code		bar	psi	MPa	l/m	GPM	kW		kg	lbs
MPW 3.54-18 15-150	34004-00076	1450	150	2175	15	15	4	5	3Ph Y 400V~50Hz	28,8	63,5
MPW 3.54-18 15-200	34004-00077	1450	200	2900	20	15	4	7	3Ph Y 400V~50Hz	30,8	67,9

MPWJ3.5 series

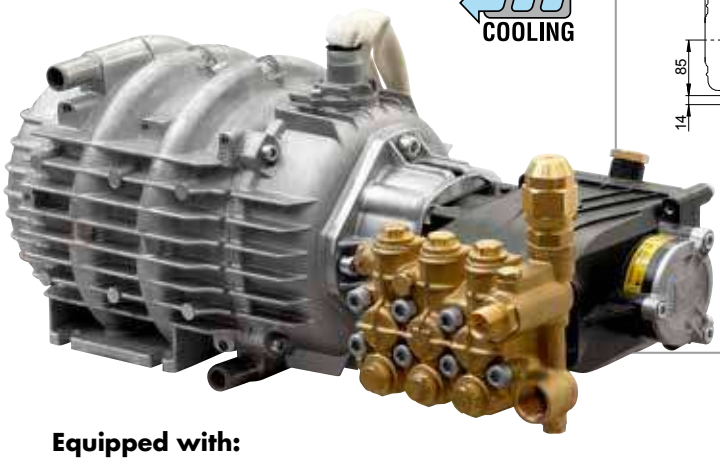

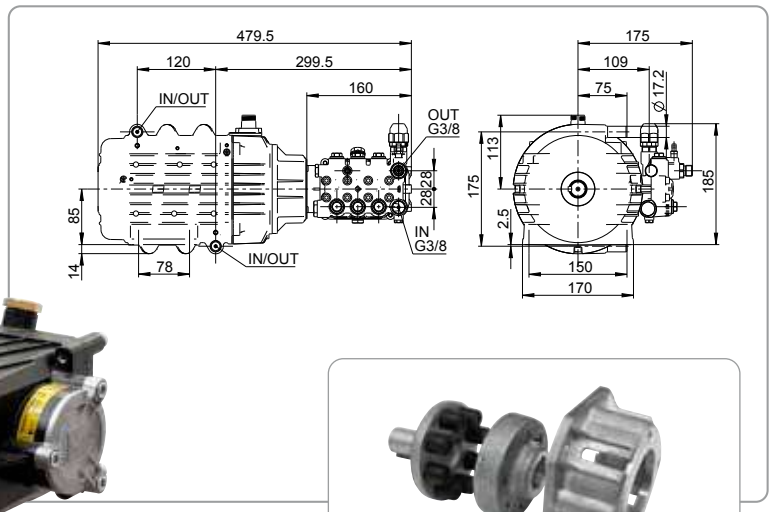

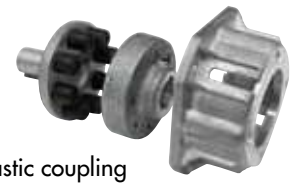
Elastic coupling

Equipped with:

- High-pressure pumps units with elastic coupling
- Fixing bracket included
- Pressure adjuster included

Model	Left shaft ver.	RPM	Max. pressure			Flow rate		Requested power	Power supply	Weight	
	Code		bar	psi	MPa	l/m	GPM	kW		kg	lbs
MPWJ 3.54-18 15-150	34004-00079	1450	150	2175	15	15	4	5	3Ph Y 400V~50Hz	29,3	64,6
MPWJ 3.54-18 15-200	34004-00080	1450	200	2900	20	15	4	7	3Ph Y 400V~50Hz	31,3	69

Le immagini e le specifiche tecniche dei prodotti non sono vincolanti e possono essere modificate senza preavviso

MPW6 series

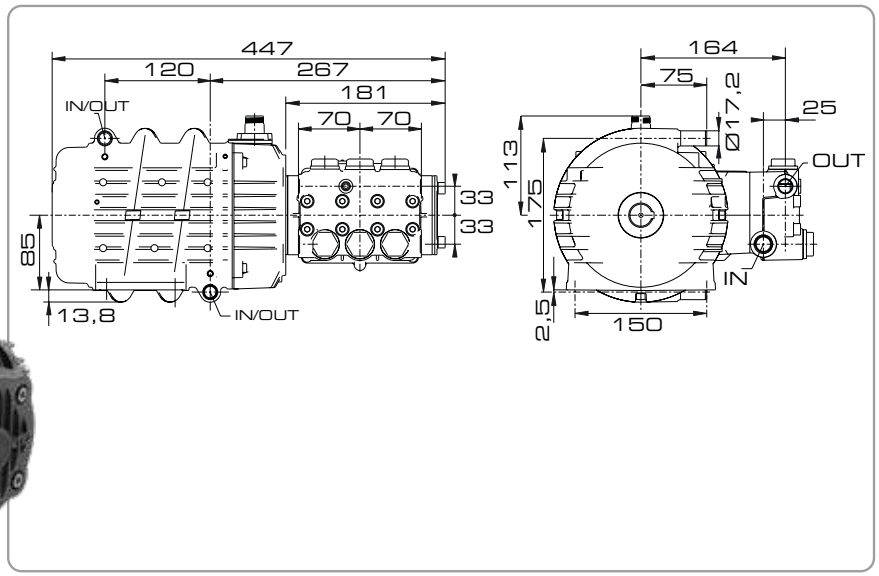

Equipped with:

- Fixing bracket included

Model	Left shaft ver.	RPM	Max. pressure			Flow rate		Requested power	Power supply	Weight	
	Code		bar	psi	MPa	l/m	GPM	kW		kg	lbs
MPW 64-20 15-150	34004-00009	1450	150	2175	15	15	4	5	3Ph Y 400V~50Hz	32	70,5
MPW 64-20 15-200	34004-00010	1450	200	2900	20	15	4	7	3Ph Y 400V~50Hz	34	74,9

Le immagini e le specifiche tecniche dei prodotti non sono vincolanti e possono essere modificate senza preavviso

MPWJ6 series

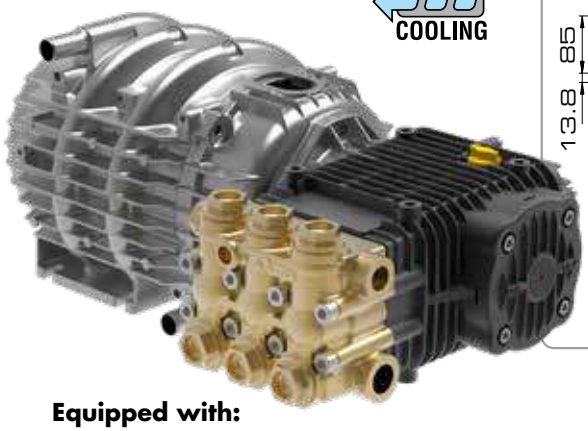

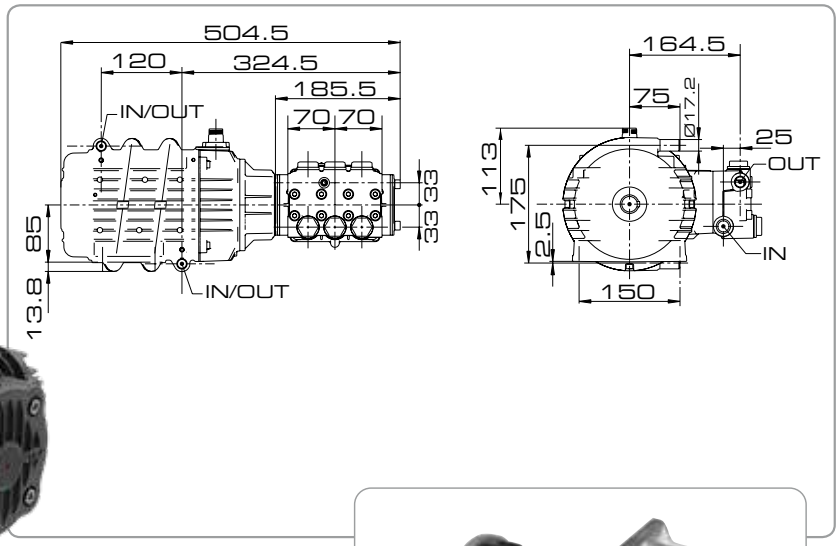

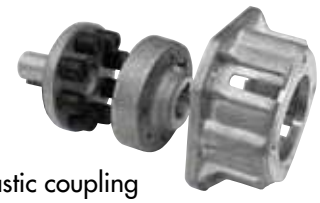

Elastic coupling

Equipped with:

- High-pressure pumps units with elastic coupling
- Fixing bracket included

Model	Left shaft ver.	RPM	Max. pressure			Flow rate		Requested power	Power supply	Weight	
	Code		bar	psi	MPa	l/m	GPM	kW		kg	lbs
MPWJ 64-20 15-150	-	1450	150	2175	15	15	4	5	3Ph Y 400V~50Hz	32,5	71,6
MPWJ 64-20 15-200	34004-00013	1450	200	2900	20	15	4	7	3Ph Y 400V~50Hz	34,5	76
MPWJ 64-20 21-200	34004-00014	1450	200	2900	20	21	5,5	9,4	3Ph Y 400V~50Hz	37,5	82,6

Top/High/Low series

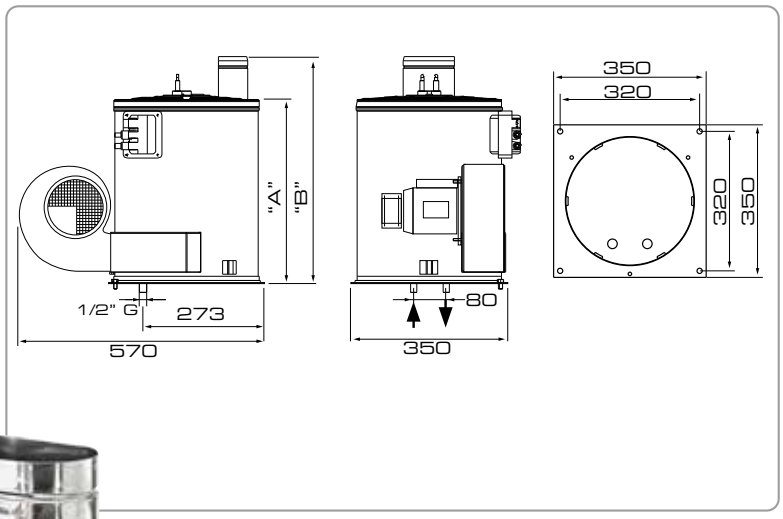

(*) *Available in various voltages*

Equipped with:

- Complete boilers for high-pressure cleaners

Model	Code	Max. pressure			Flow rate		Requested power	Power supply (*)	Thermal power	Coil lenght	Dimension	Weight	
		bar	psi	MPa	l/m	GPM	W					kg	lbs
Top	38002-00010	200	2900	20	12	3.17	300	230V ~ 50Hz	49000 Kcal/h	20 m	405 mm (A) - 510 mm (B)	38	85,9
Low	38002-00001	200	2900	20	15	3.96	300	230V ~ 50Hz	63000 Kcal/h	29,5 m	465 mm (A) - 565 mm (B)	48,5	106,8
High	38002-00002	200	2900	20	21	5.55	300	230V ~ 50Hz	63000 Kcal/h	36,5 m	600 mm (A) - 690 mm (B)	54	120

Power, air suction, depressure: which technical data is most important?

The right technical data of a vacuum cleaner is the vacuum efficiency, that is the mix of different values, i.e. air suction, motor power and depression. Air suction is the vacuumed air volume, commonly expressed in litres per seconds (l/sec) and it is the result of the average air speed multiplied by hose diameter. The depression is the vacuum power (it can be defined as the vacuum power to collect dirt) and it is commonly expressed in kPA or in mbar. It is an inverse relation to air suction: the narrower the flex diameter, the least vacuumed air volume but the best strength to pick up dirt.

Power motor is expressed in Watt and it is not proportional to vacuum efficiency!

If the vacuum cleaner is not well-done, it wastes a lot of electric power without having the best performances possible. Summing up, the vacuum cleaner efficiency is a relationship between air suction (resulting in multiplication of pressure and air suction) and motor power. All our vacuum cleaners have a top efficiency and are manufactured considering essence and user's benefit.

Fixed or tilting trolley, which one to choose?

The choice of the trolley must be made considering the type of use needed. Generally, tilting trolley is much more useful to collect dust and solids, because the tilting tank make it easier the emptying or pouring. The fixed trolley is better for liquids vacuuming, because it is equipped with drain hose system, emptying is fast and step by step, avoiding the effort of lifting the tank.

What kind of tank material is to be preferred?

Our vacuum cleaner range includes plastic tanks (polypropylene or PP) or stainless steel tanks. The PP tank is flexible, shock proof and resistant to chemical products. It is recommended for frequent moving uses or vacuuming of particularly aggressive chemicals (for example in combination with a single disc machine). The stainless steel tank is more rigid, steadier, resistant to mechanical abrasion and it is aesthetically agreeable. It is recommended for static use, with abrasive materials or in a public place.

• Number of motors
It explains how many motors there are in the vacuum cleaner. Ignition is independent in order to increase progressively the performances. The working system (whenever it is more than one) is in parallel, so the air suction increases and the depressure is steady whenever the motors are progressively switched on.

• Anti electrostatic current device
Dust rubbing at high speed against vacuum cleaner walls creates a magnetic field that neutralizes on the user with small and annoying discharges also through plastic material. This certified system removes this phenomenon on the machine, granting best comfort and safety for the user.

• Paper collector filter
Allows filtering and collection (with a valve) of rough dirt without dirty the tank whenever it is time to replace it. It is useful for dry waste, also in combination of other thinner filters.

• Cloth filter
The cloth consistency and its shape allow a simple cleaning phase and the re-usage of the filter.
It can be used only for vacuuming dry waste; if combined with nylon filter it is possible to work for a longer period of time.

• Cartridge filter
The continuous folders arranged in circle allow a higher filtering surface in a smaller area.
More cleaning autonomy with a thin filtering action. It can be used only for vacuuming dry waste and it is re-usable.

• Multipurpose washable filter
It combines all the advantages of the cartridge filter but with the plus that it can vacuum both dry and wet at the same time. It can be washed with tap water.

• HEPA filter
High Efficiency Particulate Arrestance. Hepa filter is 99,97% efficient until 0,3 micron impurities.

• Filter shaker
It clears filter from dust without touching it or opening the vacuum cleaner; the vacuum efficiency is kept at max.

• Blower function
In blower mode, a high-velocity stream of air is used to blow away debris from surfaces.

• Power tool socket
The vacuum cleaner switches on and off by power tool switching on and off. In this way it is possible to vacuum dust directly without dispersion in the surrounding area.

• M Class certificate for vacuum cleaner
It is the ability of the vacuum cleaner to keep (though the filtering system and the manufacturing specifications of the vacuum cleaner) the 99,9% of all vacuumed dust with OEL (Occupational Exposure Limit) higher than a 0,1 mg/m3. Some example of the dusts that can be kept with these vacuum cleaners are working residuals of: wood, copper, insecticide and pesticide, manganese (tools of the earth-moving equipments), platinum, nickel etc.

Nomenclature

Windy 365 IF

F = Fixed
R = Tilting

Number of motors

P = Plastic
I = Stainless steel

Tank capacity (litres)

Technical information

Code	Model	Page	Voltage	Motor power	Column depresion	Air suction	Tank capacity	Noise level	Packaging L x l x H	Packaging weight	Packaging weight	Pieces for pallet
			V - Hz	W/W max	kPa/mmH$_2$O	l/s	l	dB (A)	cm	kg	lbs	N°
40056-00003	NYO	150	2x battery 18Li	200/350	13/1300	20.2 l/s	10 l	70 dB (A)	-	5,2	11,4	-
40025-00019	SILENT	152	230V - 50Hz	800/900	24/2400	44 l/s	12 l	72 dB (A)	39x39x42	7,4	16	30
40006-00021	WHISPER	154	230V - 50Hz	800/900	24/2400	44 l/s	15 l	72 dB (A)	49x39x42	9,5	20	20
40041-00016	PRO WORKER	156	220-240V - 50-60Hz	1200/1400	24/2400	70 l/s	30 l	75 dB (A)	51x36x56	11	24	16
40008-00031	WINDY 120 PF	158	230V - 50Hz	1200/1400	24/2400	65 l/s	20 l	79 dB (A)	38x37x62	10	22	18
40008-00001	WINDY 120 IF	160	230V - 50Hz	1200/1400	24/2400	65 l/s	20 l	79 dB (A)	38x37x62	10	22	18
40008-00030	WINDY 130 PF	162	230V - 50Hz	1200/1400	24/2400	65 l/s	30 l	79 dB (A)	38x37x70	11	24	18
40008-00018	WINDY 130 IF	164	230V - 50Hz	1200/1400	24/2400	65 l/s	30 l	79 dB (A)	38x37x70	11	24	18
40009-00017	WINDY 165 PF	166	230V - 50Hz	1200/1400	24/2400	65 l/s	65 l	79 dB (A)	75x60x103	30,5	67	4
40009-00016	WINDY 165 IF	168	230V - 50Hz	1200/1400	24/2400	65 l/s	65 l	79 dB (A)	75x60x103	30,5	67	4
40018-00005	WINDY 265 PF	170	230V - 50Hz	2000/2400	22/2200	130 l/s	65 l	79 dB (A)	60x48x87	18,8	41	8
40018-00001	WINDY 265 IF	172	230V - 50Hz	2000/2400	22/2200	130 l/s	65 l	79 dB (A)	60x48x87	19,8	44	8
40020-00001	WINDY 365 IR	174	230V - 50Hz	3000/3600	22/2200	195 l/s	65 l	79 dB (A)	65x55x104	25,5	56	4
40019-00002	WINDY 278 PF	176	230V - 50Hz	2000/2400	22/2200	130 l/s	78 l	79 dB (A)	75x60x103	29,6	65	4
40019-00001	WINDY 278 IF	178	230V - 50Hz	2000/2400	22/2200	130 l/s	78 l	79 dB (A)	75x60x103	29,6	65	4

Code	Model	Page	Voltage	Motor power	Column depresion	Air suction	Tank capacity	Noise level	Packaging L x l x H	Packaging weight	Packaging weight	Pieces for pallet
			V - Hz	W/W max	kPa/mmH$_2$O	l/s	l	dB (A)	cm	kg	lbs	N°
40021-00006	WINDY 378 PF	180	230V - 50Hz	3000/3600	22/2200	195 l/s	78 l	79 dB (A)	75x60x103	30,5	67	4
40021-00001	WINDY 378 IR	182	230V - 50Hz	3000/3600	22/2200	195 l/s	78 l	79 dB (A)	75x60x103	30,5	67	4
40007-00001	ZEUS IF	184	230V - 50Hz	1200/1400	24/2400	53 l/s	50 l	71 dB (A)	64x54x92	21,5	47	4
40005-00009	DOMUS PR	186	230V - 50Hz	2000/2400	24/2400	108 l/s	78 l	74 dB (A)	75x60x103	30,5	67	4
40005-00023	DOMUS IF	188	230V - 50Hz	2000/2400	24/2400	108 l/s	78 l	74 dB (A)	75x60x103	30,5	67	4
40005-00001	DOMUS IR	190	230V - 50Hz	2000/2400	24/2400	108 l/s	78 l	74 dB (A)	75x60x103	33,5	74	4
40004-00008	TAURUS PR	192	230V - 50Hz	3000/3600	24/2400	162 l/s	77 l	76 dB (A)	75x60x103	32,5	71	4
40004-00001	TAURUS IR	194	230V - 50Hz	3000/3600	24/2400	162 l/s	78 l	76 dB (A)	75x60x103	34,5	76	4
40004-00023	TAURUS IR 2 Way	196	230V - 50Hz	3000/3600	24/2400	162 l/s	78 l	76 dB (A)	75x60x103	32	70	4
40003-00009	HYDRUS	208	230V - 50Hz	1200/1400	27/2700	70 l/s	20 l	75 dB (A)	40x39x64	9,5	20,9	18
40038-00001	JUPITER	210	230V - 50Hz	1100	23/2300	50 l/s	6,5 l	70 dB (A)	60x40x48	14	31	16
40010-00001	APOLLO IF	212	230V - 50Hz	1200/1400	24/2400	53 l/s	50 l	71 dB (A)	64x54x92	24	53	4
40011-00002	SOLARIS IF	214	230V - 50Hz	2200/2400	24/2400	108 l/s	78 l	74 dB (A)	75x60x103	37	82	4
40011-00008	COSTELLATION IR	216	230V - 50Hz	2200/2400	24/2400	108 l/s	78 l	74 dB (A)	75x60x103	37	82	4

Nyo

MORE INFO

CHARACTERISTICS

• **Cordless Backpack Vacuum Cleaner** • The professional choice for commercial and household cleaning • The complete set of attachments helps to clean hard-to-reach areas efficiently. • It is ideal for airplane cabs, buses, trains, cinemas and theaters. • Schools, libraries, commercial offices, hotels, department stores, tight or confined space such as stairs. • Lavor backpack vacuum cleaner makes it easier and quicker to clean particularly small spaces. • It is comfortable to wear thanks to its low weight and its adjustable padded shoulders. • The convenient tool belt ensures that additional nozzles and adapters are always within easy reach, enabling access to even the most difficult corners. • The filter guarantees excellent filtration of the finest dust particles and the return of perfectly clean air into the environment. • Maximum freedom of movement thanks to the lithium battery enables you to effortlessly reach anywhere. • Effective in any situation, equipped with a set of nozzles to meet any kind of need • Always ready to use: no self-discharge, it is always ready when you need it.

TECHNICAL DATA

	Nyo
Code	40056-00003
Voltage	2x battery 18 Li
Battery capacity	6.8 Ah
Power	200W (ECO) | 350W (POWER)
Column depression	13 kPa/1300 mmH_2O
Sound level	70 dB (ECO) | 75 dB (POWER)
Air suction	16.2 l/s (ECO) | 20.2 l/s (POWER)
Approx. Runtime	70 Mins (ECO) | 45 Mins (POWER)
Approx. Recharge time	125 Mins
Filtration type	HEPA 13
Total /dust bage capacity	10 l./5 l.
Dimension (cm)	30 x 30 h 59 cm
Weight with batteries/without batteries	4,9 Kg/3,6 Kg

PLUS

Professional metal hooks practical and robust

Comfortable to wear thanks to its low weight and adjustable padded shoulders, remote control integrated into the belt

HEPA 13 filter guarantees excellent filtration of the finest dust particles

Li-ion battery 18V, recharge in 125 min

STANDARD EQUIPMENT

• 00080-05377 Strechable hose	• 00080-05378 Telescopic wand	• 00080-05379 Crevice tool	• 00080-05380 Dusting brush	• 00080-05376 Combination floor tool
• 00080-05381 Upholstery tool	• 00056-00119 Charger	• 00055-00187 2x Battery	• 00070-00818 Paper collector filter	• 00070-00819 Cloth filter
• 00070-00821 HEPA 13 Filter	• 00070-00820 Prefilter			

Silent

MORE INFO

CHARACTERISTICS

Professional ultra silent vacuum cleaners, Lavor Silent was conceived to meet the needs of floor care sector. • Silenced single stage motor (high efficiency). • Integrated accessory holder. • Shock and overturn proof design. • 12 litre plastic tank (PP) • Cloth filter • Rotating ON/OFF switch • Paper collector filter. • 10 m high visibility power cable. • Accessories Ø 32

TECHNICAL DATA

	Silent
code	40025-00019
voltage	220-240V ~ 50-60Hz
n°motors - power	1 - 800 W
column depression	24 kPa/2400 mmH_2O
air suction	44 l/s
total volume	12 l.
dimension (cm)/weight	39x39x42/6,8 kg

PLUS

Rotating ON/OFF and comfortable carrying handle

Power cable holder and accessory storage facility (accessories d. 32 mm)

12 litre plastic tank (PP) and swivel connection to avoid tangles in the flex hose

Shock and overturn proof design

STANDARD EQUIPMENT

• 00080-05155 Hose 2 m	• 00080-05356 Ø 32	• 00080-05162	• 00080-05160	• 00080-05158
• 00070-00774	• 00070-00776 Cloth filter	• 10 m power cable high visibility		

OPTIONAL

• 10001-13222 Paper collector filter set (10 pcs)	• 10001-13660 Kit HEPA filter + gasket	• 10001-08307 Cloth filter		

Whisper

LONG LIFE MOTOR

MORE INFO

CHARACTERISTICS

• Ultra silenced single stage motor (high efficiency). • Microfiber collector filter. • Hepa filter • Full collector filter indicator. • Exaust air filter. • Integrated accessory holder. • Shock & overturn proof design. • 10 m power cable high visibility. • Accessories Ø 32

TECHNICAL DATA

	Whisper
code	40006-00021
voltage	230V ~ 50Hz
n°motors - power	1 - 800 W
column depression	24 kPa/2400 mmH_2O
air suction	44 l/s
total volume	15 l.
dimension (cm)/weight	38x48x42 / 8,5 kg

PLUS

Integrated accessory storage facility (accessories d. 32 mm) and comfortable carrying handle

Ultra silenced high efficiency single stage motor and exhaust air filter

Accessory storage facility on the base

Shock and overturn proof design

STANDARD EQUIPMENT

• 00080-05191 Hose 2,5 m	• 00080-05356 Ø 32	• 00080-05162	• 00080-05160	• 00080-05199 floor brush
• 00080-05159	• 00070-00596 Microfiber collector filter	• 00070-00777 Hepa filter	• 00070-00785 Exaust air filter	• 10 m power cable high visibility

OPTIONAL

• 10001-13222 Paper collector filter set (10 pcs) on request	• 10001-08242 Microfiber collector filter set (10 pcs) on request			

Pro worker EM

MORE INFO

CHARACTERISTICS

• High efficiency by pass motor • Suction system with by-pass cooling • Power tool socket (max 2200 W) • Automatic ON/OFF filter shaker • Shock proof tank (PP) • Liquid float valve • Dirty filter indicator • Rotary switch • Hepa filter • Microfiber collector filter • M/E10 suction filter with NANO TECH coating • Extension steel pipe • Multidiameter tool adapter • Flex hose elastic fastening • 7,5 m power cable. • Accessories Ø35.

TECHNICAL DATA

	PRO Worker EM
code	40041-00016
voltage	220-240V ~ 50-60Hz
n°motors - power	1 - 1400 W
column depression	24 kPa/2400 mmH_2O
air suction	70 l/s
volume	30 l.
dimension (cm)/weight	33x55x55,7/11,8 kg

PLUS

Accessory storage facility (accessories d. 35 mm) and comfortable carrying handle

Power tool socket (max 2200 Watt) with delayed vacuum shut off

Plastic professional closing hooks

HEPA filter for outlet air, microfiber collector filter and M/E10 suction filter with NANO TECH coating

STANDARD EQUIPMENT

• 00080-01623 + 00080-03083	• 00080-01796	• 00080-02003	• 00080-02004	• 00080-02005
• 00080-01911	• 00080-01912	• 00009-02729	• 00070-00416 M/E 10 filter	• 2x 00070-00806 Microfiber
• 00070-00417	• 00070-00418 Hepa filter	• 00070-00419		

OPTIONAL

• 10001-08255 Microfiber collector filter set (5 pcs)	• 10001-09511 Accessory kit (hose-floor wet and dry accessories)	• 10001-08259 M/E filter	• 10001-09406 Hepa filter for outlet air	

Windy 120 PF

MORE INFO

CHARACTERISTICS

• High efficiency by pass motor. • Suction system with by-pass cooling. • Plastic tank. • Shock proof trolley. • Liquid float valve. • Cloth filter. • 7,5 m power cable. • Accessories Ø 35. • Handy accessory holder.

TECHNICAL DATA

	Windy 120 PF
code	40008-00031
voltage	220-240V ~ 50-60Hz
n°motors - power (max)	1 - 1200 (1400) W
column depression	24 kPa/2400 mmH_2O
air suction	65 l/s
total volume/dust/liquid	20 l./14 l./16 l.
dimension (cm)/weight	40x38x54/8,3 Kg

PLUS

High efficiency motor, suction system with by-pass cooling, rotating ON/OFF main switch

Professional stainless steel closing hooks

Shock proof plastic tank and liquid float valve for liquid suction

Shock proof trolley with two front pivoting wheels and two big rear wheels for better stability and easy movement

STANDARD EQUIPMENT

• 00080-03988 Hose 2,5 m	• 10001-09429	• 00080-02003	• 00080-02004	• 00080-02005
• 00080-01912	• 00080-03729	• 00080-01911	• 00070-00666 Cloth filter	• 00070-00556
• 00070-00548				

OPTIONAL

• 10001-08169 Paper collector filter set - 10 pcs	• 10001-08186 Cloth filter	• 00080-01955 Brush carpet Turbo brush Type 2	• 10001-08246 Cartridge washable filter	• 10001-08249 HEPA filter
• 10001-08174 Foam filter				

Windy 120 IF

CLOTH

MORE INFO

CHARACTERISTICS

• High efficiency by pass motor. • Suction system with by-pass cooling. • Stainless steel tank. • Shock proof trolley. • Liquid float valve. • Cloth filter. • 7,5 m power cable. • Accessories Ø 35. • Handy accessory holder.

TECHNICAL DATA

	Windy 120 IF
code	40008-00001
voltage	220-240V ~ 50-60Hz
n°motors - power (max)	1 - 1200 (1400) W
column depression	24 kPa/2400 mmH_2O
air suction	65 l/s
total volume/dust/liquid	20 l./14 l./16 l.
dimension (cm)/weight	35x35x66/8 Kg

PLUS

High efficiency motor, suction system with by-pass cooling, rotating ON/OFF main switch

Professional stainless steel closing hooks

Anti-corrosion stainless steel tank and liquid float valve for liquid suction

Shock proof trolley with two front pivoting wheels and two big rear wheels for better stability and easy movement

STANDARD EQUIPMENT

• 00080-03988 Hose 2,5 m	• 10001-09429	• 00080-02003	• 00080-02004	• 00080-02005
• 00080-01912	• 00080-03729	• 00080-01911	• 00070-00666 Cloth filter	• 00070-00556
• 00070-00548				

OPTIONAL

• 10001-08169 Paper collector filter set - 10 pcs	• 10001-08186 Cloth filter	• 00080-01955 Brush carpet Turbo brush Type 2	• 10001-08246 Cartridge washable filter	• 10001-08249 HEPA filter
• 10001-08174 Foam filter				

Windy 130 PF

MORE INFO

CHARACTERISTICS

• High efficiency by pass motor. • Suction system with by-pass cooling. • Plastic tank. • Shock proof trolley. • Liquid float valve. • Washable filter. • 7,5 m power cable. • Accessories Ø 35. • Handy accessory holder.

TECHNICAL DATA

	Windy 130 PF
code	40008-00030
voltage	220-240V ~ 50-60Hz
n°motors - power (max)	1 - 1200 (1400) W
column depression	24 kPa/2400 mmH_2O
air suction	65 l/s
total volume/dust/liquid	30 l./15 l./17 l.
dimension (cm)/weight	37x37x71/8,5 Kg

PLUS

High efficiency motor, suction system with by-pass cooling, rotating ON/OFF main switch, ergonomic handle for easy movement

Professional stainless steel closing hooks

Shock proof plastic tank and liquid float valve for liquid suction

Shock proof trolley with two front pivoting wheels and two big rear wheels for better stability and easy movement

STANDARD EQUIPMENT

• 00080-03988 Hose 2,5 m	• 10001-09429	• 00080-02003	• 00080-02004	• 00080-02005
• 00080-01912	• 00080-03729	• 00080-01911	• 00070-00565 Washable filter	• 00070-00556
• 00070-00548				

OPTIONAL

• 10001-08169 Paper collector filter set - 10 pcs	• 10001-08186 Cloth filter	• 00080-01955 Brush carpet Turbo brush Type 2	• 10001-08246 Cartridge washable filter	• 10001-08249 HEPA filter
• 10001-08174 Foam filter				

Windy 130 IF

MORE INFO

CHARACTERISTICS

• High efficiency by pass motor. • Suction system with by-pass cooling. • Stainless steel tank. • Shock proof trolley. • Liquid float valve. • Washable filter. • 7,5 m power cable. • Accessories Ø 35. • Handy accessory holder.

TECHNICAL DATA

	Windy 130 IF
code	40008-00018
voltage	220-240V ~ 50-60Hz
n°motors - power (max)	1 - 1200 (1400) W
column depression	24 kPa/2400 mmH_2O
air suction	65 l/s
total volume/dust/liquid	30 l./15 l./17 l.
dimension (cm)/weight	37x37x71/8,5 Kg

PLUS

High efficiency motor, suction system with by-pass cooling, rotating ON/OFF main switch, ergonomic handle for easy movement

Professional stainless steel closing hooks

Anti-corrosion stainless steel tank and liquid float valve for liquid suction

Shock proof trolley with two front pivoting wheels and two big rear wheels for better stability and easy movement

STANDARD EQUIPMENT

• 00080-03988 Hose 2,5 m	• 10001-09429	• 00080-02003	• 00080-02004	• 00080-02005
• 00080-01912	• 00080-03729	• 00080-01911	• 00070-00565 Washable filter	• 00070-00556
• 00070-00548				

OPTIONAL

• 10001-08169 Paper collector filter set - 10 pcs	• 10001-08186 Cloth filter	• 00080-01955 Brush carpet Turbo brush Type 2	• 10001-08246 Cartridge washable filter	• 10001-08249 HEPA filter
• 10001-08174 Foam filter				

Windy 165 PF

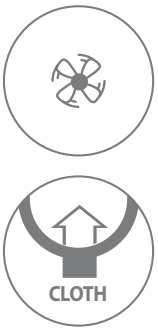

MORE INFO

CHARACTERISTICS

• High efficiency by pass motor. • Suction system with by-pass cooling. • Plastic tank (PP). • Professional closing hooks. • Shock proof trolley. • Liquid float valve. • Cloth filter. • 7,5 m power cable. • Easy standing head (during filter cleaning). • Traceless wheels.
• Accessories Ø 40.

TECHNICAL DATA

	Windy 165 PF
code	40009-00017
voltage	220-240V ~ 50-60Hz
n°motors - power (max)	1 - 1200 (1400) W
column depression	24 kPa/2400 mmH_2O
air suction	65 l/s
total volume/dust/liquid	65 l./30 l./40 l.
dimension (cm)/weight	44x46x96/11 kg

PLUS

High efficiency motor, suction system with by-pass cooling, rotating ON/OFF main switch

Professional stainless steel closing hooks and ergonomic handle for easy movement

Shock proof plastic tank and liquid float valve for liquid suction, swivel connection avoiding tangles in the flex hose

Shock proof trolley with pivoting wheels for easy movement and base with accessory storage facility (accessories d. 40 mm)

STANDARD EQUIPMENT

• 00080-03979 Hose 2,5 m	• 10001-09446	• 00080-01931	• 00080-01932	• 00080-02015
• 00080-02004	• 00080-02005	• 00070-00556	• 00070-00678 Cloth filter	

OPTIONAL

• 10001-08169 Paper collector filter set (10 pcs)	• 10001-08209 Nylon filter	• 10001-08249 HEPA filter	• 10001-08246 Washable filter	• 10001-08174 Foam filter

Windy 165 IF

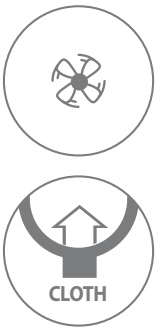

MORE INFO

CHARACTERISTICS

• High efficiency by pass motor. • Suction system with by-pass cooling. • Stainless steel tank. • Professional closing hooks. • Shock proof trolley. • Liquid float valve. • Cloth filter. • 7,5 m power cable. • Easy standing head (during filter cleaning). • Traceless wheels. • Accessories Ø 40.

TECHNICAL DATA

	Windy 165 IF
code	40009-00016
voltage	220-240V ~ 50-60Hz
n°motors - power (max)	1 - 1200 (1400) W
column depression	24 kPa/2400 mmH_2O
air suction	65 l/s
total volume/dust/liquid	65 l./30 l./40 l.
dimension (cm)/weight	44x46x96/12,5 kg

PLUS

High efficiency motor, suction system with by-pass cooling, rotating ON/OFF main switch

Professional stainless steel closing hooks and ergonomic handle for easy movement

Anti-corrosion stainless steel tank and liquid float valve for liquid suction, swivel connection avoiding tangles in the flex hose

Shock proof trolley with pivoting wheels for easy movement and base with accessory storage facility (accessories d. 40 mm)

STANDARD EQUIPMENT

• 00080-03979 Hose 2,5 m	• 10001-09446	• 00080-01931	• 00080-01932	• 00080-02015
• 00080-02004	• 00080-02005	• 00070-00556	• 00070-00678 Cloth filter	

OPTIONAL

• 10001-08169 Paper collector filter set (10 pcs)	• 10001-08209 Nylon filter	• 10001-08249 HEPA filter	• 10001-08246 Washable filter	• 10001-08174 Foam filter

Windy 265 PF

MORE INFO

CHARACTERISTICS

• 2 high efficiency by pass motors. • Suction system with by-pass cooling. • Filter cleaning system. • Plastic tank (PP). • Shock proof trolley. • Liquid float valve. • Cloth filter. • 7,5 m power cable. • Traceless wheels. • Accessories Ø 40. • Handy accessory holder. • Pneumatic filter shaker

TECHNICAL DATA

	Windy 265 PF
code	40018-00005
voltage	220-240V ~ 50-60Hz
n°motors - power (max)	2 - 2000 (2400) W
column depression	22 kPa/2200 mmH_2O
air suction	130 l/s
total volume/dust/liquid	65 l./30 l./40 l.
dimension (cm)/weight	44x46x96/13 kg

PLUS

2 high efficiency motors, suction system with by-pass cooling, rotating ON/OFF main switch

Pneumatic filter shaker and flow reverse for perfect filter cleaning for top vacuum performances

Shock proof plastic tank and liquid float valve for liquid suction, swivel connection avoiding tangles in the flex hose

Shock proof trolley with pivoting wheels for easy movement and base with accessory storage facility (accessories d. 40 mm)

STANDARD EQUIPMENT

• 00080-03979 Hose 2,5 m	• 10001-09446	• 00080-01931	• 00080-01932	• 00080-01956
• 00080-01957	• 00080-01958	• 10001-09468 Cloth filter		

OPTIONAL

• 10001-08169 Paper collector filter set (10 pcs)	• 00070-00673 Cloth filter for fine dust	• 10001-08208 Nylon filter		

Windy 265 IF

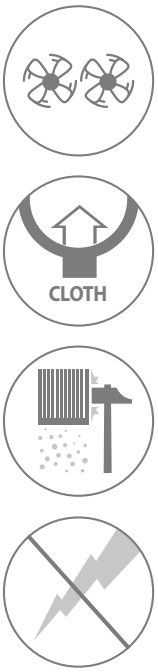

MORE INFO

CHARACTERISTICS

• 2 high efficiency by pass motors. • Suction system with by-pass cooling. • Filter cleaning system. • Stainless steel tank. • Static electric shock inhibitor. • Shock proof trolley. • Liquid float valve. • Cloth filter. • 7,5 m power cable. • Traceless wheels. • Accessories Ø 40. • Handy accessory holder. • Pneumatic filter shaker

TECHNICAL DATA

	Windy 265 IF
code	40018-00001
voltage	220-240V ~ 50-60Hz
n°motors - power (max)	2 - 2000 (2400) W
column depression	22 kPa/2200 mmH_2O
air suction	130 l/s
total volume/dust/liquid	65 l./30 l./40 l.
dimension (cm)/weight	44x46x96/14,5 kg

PLUS

2 high efficiency motors, suction system with by-pass cooling, rotating ON/OFF main switch

Pneumatic filter shaker and flow reverse for perfect filter cleaning for top vacuum performances

Anti-corrosion stainless steel tank and liquid float valve for liquid suction, swivel connection avoiding tangles in the flex hose

Shock proof trolley with pivoting wheels for easy movement and base with accessory storage facility (accessories d. 40 mm)

STANDARD EQUIPMENT

• 00080-03979 Hose 2,5 m	• 10001-09446	• 00080-01931	• 00080-01932	• 00080-01956
• 00080-01957	• 00080-01958	• 10001-09468 Cloth filter		

OPTIONAL

• 10001-08169 Paper collector filter set (10 pcs)	• 00070-00673 Cloth filter for fine dust	• 10001-08208 Nylon filter		

Windy 365 IR

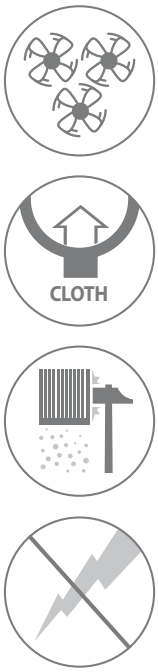

MORE INFO

CHARACTERISTICS

• 3 high efficiency by pass motors. • Suction system with by-pass cooling. • Filter cleaning system. • Stainless steel tank. • Static electric shock inhibitor. • Tilting tank. • Fully removable tank. • Shock proof trolley. • Liquid float valve. • Cloth filter. • 7,5 m power cable. • Traceless wheels. • Accessories Ø 40. • Handy accessory holder. • Pneumatic filter shaker

TECHNICAL DATA

	Windy 365 IR
code	40020-00001
voltage	220-240V ~ 50-60Hz
n°motors - power (max)	3 - 3000 (3600) W
column depression	22 kPa/2200 mmH_2O
air suction	195 l/s
total volume/dust/liquid	65 l./30 l./40 l.
dimension (cm)/weight	62x51x100/20 kg

PLUS

3 high efficiency motors, suction system with by-pass cooling, rotating ON/OFF main switch

Pneumatic filter shaker and flow reverse for perfect filter cleaning for top vacuum performances

Antistatic device eliminating those annoying magnetic fields that can form inside the tank due to the high speed movement of particles. Improves user's comfort of use

Tilting anti-corrosion stainless steel tank for easy emptying and fully removable tank if necessary

STANDARD EQUIPMENT

• 00080-03979 Hose 2,5 m	• 10001-09446	• 00080-01931	• 00080-01932	• 00080-01956
• 00080-01957	• 00080-01958	• 10001-09468 Cloth filter		

OPTIONAL

• 10001-08169 Paper collector filter set (10 pcs)	• 00070-00673 Cloth filter for fine dust	• 10001-08208 Nylon filter		

Windy 278 PF

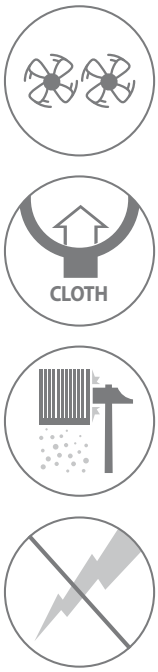

MORE INFO

CHARACTERISTICS

• 2 high efficiency by pass motors. • Suction system with by-pass cooling. • Filter cleaning system. • Plastic tank (PP). • Shock proof trolley. • Liquid float valve. • Drain hose system. • Static electric shock inhibitor. • 7,5 m power cable. • Traceless wheels. • Accessories Ø 40. • Handy accessory holder. • Pneumatic filter shaker • Pneumatic filter shaker

TECHNICAL DATA

	Windy 278 PF
code	40019-00002
voltage	220-240V ~ 50-60Hz
n°motors - power (max)	2 - 2000 (2400) W High efficiency motor.
column depression	22 kPa/2200 mmH_2O
air suction	130 l/s
total volume/dust/liquid	78 l./35 l./48 l.
dimension (cm)/weight	62x51x96/21,5 kg

PLUS

2 high efficiency motors, suction system with by-pass cooling, rotating ON/OFF main switch

Pneumatic filter shaker and flow reverse for perfect filter cleaning for top vacuum performances

Drain hose system for tank easy emptying

Shock proof trolley with pivoting wheels for easy movement and base with accessory storage facility (accessories d. 40 mm)

STANDARD EQUIPMENT

• 00080-03979 Hose 2,5 m	• 10001-09446	• 00080-01931	• 00080-01932	• 00080-01956
• 00080-01957	• 00080-01958	• 10001-09544 Cloth filter		

OPTIONAL

• 10001-08169 Paper collector filter set (10 pcs)	• 10001-09545 Cloth filter for fine dust	• 10001-08208 Nylon filter	• 10001-08168 Washable filter	• 10001-08178 Hepa filter

Windy 278 IF

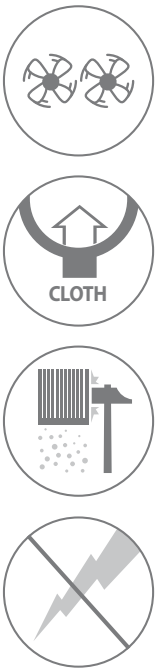

MORE INFO

CHARACTERISTICS

• 2 high efficiency by pass motors. • Suction system with by-pass cooling. • Filter cleaning system. • Stainless steel tank. • Static electric shock inhibitor. • Shock proof trolley. • Liquid float valve. • Cloth filter. • Drain hose system. • 7,5 m power cable. • Traceless wheels. • Accessories Ø 40. • Handy accessory holder. • Pneumatic filter shaker

TECHNICAL DATA

	Windy 278 IF
code	40019-00001
voltage	220-240V ~ 50-60Hz
n°motors - power (max)	2 - 2000 (2400) W High efficiency motor.
column depression	22 kPa/2200 mmH_2O
air suction	130 l/s
total volume/dust/liquid	78 l./35 l./48 l.
dimension (cm)/weight	62x51x96/23 kg

PLUS

2 high efficiency motors, suction system with by-pass cooling, rotating ON/OFF main switch

2 Pneumatic filter shaker and flow reverse for perfect filter cleaning for top vacuum performances

Drain hose system for tank easy emptying

Shock proof trolley with pivoting wheels for easy movement and base with accessory storage facility (accessories d. 40 mm)

STANDARD EQUIPMENT

• 00080-03979 Hose 2,5 m	• 10001-09446	• 00080-01931	• 00080-01932	• 00080-01956
• 00080-01957	• 00080-01958	• 10001-09544 Cloth filter		

OPTIONAL

• 10001-08169 Paper collector filter set (10 pcs)	• 10001-09545 Cloth filter for fine dust	• 10001-08208 Nylon filter	• 10001-08168 Washable filter	• 10001-08178 Hepa filter

Windy 378 PF

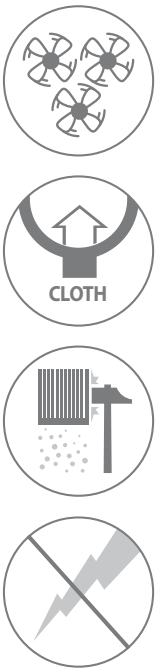

MORE INFO

CHARACTERISTICS

• 3 high efficiency by pass motors. • Suction system with by-pass cooling. • Filter cleaning system. • Plastic tank (PP). • Shock proof trolley. • Liquid float valve. • Static electric shock inhibitor. • Drain hose system. • 7,5 m power cable. • Traceless wheels. • Accessories Ø 40. • Handy accessory holder. • Pneumatic filter shaker

TECHNICAL DATA

	Windy 378 PF
code	40021-00006
voltage	220-240V ~ 50-60Hz
n°motors - power (max)	3 - 3000 (3600) W High efficiency motor.
column depression	22 kPa/2200 mmH_2O
air suction	195 l/s
total volume/dust/liquid	78 l./35 l./48 l.
dimension (cm)/weight	62x51x99/23,5 kg

PLUS

3 high efficiency motors, suction system with by-pass cooling, rotating ON/OFF main switch

Pneumatic filter shaker and flow reverse for perfect filter cleaning for top vacuum performances

Drain hose system for tank easy emptying

Shock proof trolley with pivoting wheels for easy movement and base with accessory storage facility (accessories d. 40 mm)

STANDARD EQUIPMENT

• 00080-03979 Hose 2,5 m	• 10001-09446	• 00080-01931	• 00080-01932	• 00080-01956
• 00080-01957	• 00080-01958	• 10001-09544 Cloth filter		

OPTIONAL

• 10001-08169 Paper collector filter set (10 pcs)	• 10001-09545 Cloth filter for fine dust	• 10001-08208 Nylon filter	• 10001-08168 Washable filter	• 10001-08178 Hepa filter

Windy 378 IR

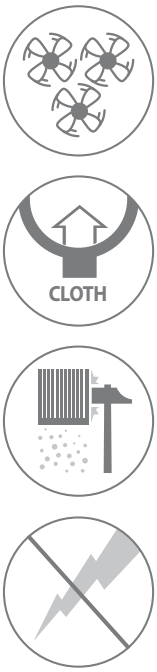

MORE INFO

CHARACTERISTICS

• 3 high efficiency by pass motors. • Suction system with by-pass cooling. • Filter cleaning system. • Stainless steel tank. • Static electric shock inhibitor. • Tilting tank. • Fully removable tank. • Shock proof trolley. • Liquid float valve. • Cloth filter. • 7,5 m power cable. • Traceless wheels. • Accessories Ø 40. • Handy accessory holder. • Pneumatic filter shaker

TECHNICAL DATA

	Windy 378 IR
code	40021-00001
voltage	220-240V ~ 50-60Hz
n°motors - power (max)	3 - 3000 (3600) W High efficiency motor.
column depression	22 kPa/2200 mmH_2O
air suction	195 l/s
total volume/dust/liquid	78 l./35 l./48 l.
dimension (cm)/weight	62x51x99/26 kg

PLUS

3 high efficiency motors, suction system with by-pass cooling, rotating ON/OFF main switch

Pneumatic filter shaker and flow reverse for perfect filter cleaning for top vacuum performances

Antistatic device eliminating those annoying magnetic fields that can form inside the tank due to the high speed movement of particles. Improves user's comfort of use

Tilting anti-corrosion stainless steel tank for easy emptying and fully removable tank if necessary

STANDARD EQUIPMENT

• 00080-03979 Hose 2,5 m	• 10001-09446	• 00080-01931	• 00080-01932	• 00080-01956
• 00080-01957	• 00080-01958	• 10001-09544 Cloth filter		

OPTIONAL

• 10001-08169 Paper collector filter set (10 pcs)	• 10001-09545 Cloth filter for fine dust	• 10001-08208 Nylon filter	• 10001-08168 Washable filter	• 10001-08178 Hepa filter

Zeus IF

MORE INFO

CHARACTERISTICS

• Silenced two stage motor. • Suction system with by-pass cooling. • Stainless steel tank. • Professional closing hooks. • Static electric shock inhibitor. • Drain hose system. • Shock proof trolley. • Liquid float valve. • Cloth filter. • 10 m power cable. • Easy standing head (during filter cleaning). • Traceless wheels. • Accessories Ø 40.

TECHNICAL DATA

	Zeus IF
code	40007-00001
voltage	220-240V ~ 50-60Hz
n°motors - power (max)	1 - 1200 (1400) W
column depression	21,6 kPa/2200 mmH_2O
air suction	53 l/s
total volume/dust/liquid	50 l./21 l./35 l.
dimension (cm)/weight	62x51x85/16,5 kg

PLUS

Antistatic device eliminating those annoying magnetic fields that can form inside the tank due to the high speed movement of particles. Improves user's comfort of use

Shock proof trolley with two front pivoting wheels and two big rear wheels for better stability and easy movement

Drain hose system for tank easy emptying

Anti-corrosion stainless steel tank and liquid float valve for liquid suction

STANDARD EQUIPMENT

• 00080-03979 Hose 2,5 m	• 10001-09446	• 00080-01931	• 00080-01932	• 00080-02015
• 00080-02004	• 00080-02005	• 10001-09339	• 10001-09337 Cloth filter	

OPTIONAL

• 10001-08169 Paper collector filter set (10 pcs)	• 10001-08209 Nylon filter	• 10001-08252 Cartridge filter	• 10001-08253 HEPA filter	

Domus PR

MORE INFO

CHARACTERISTICS

• 2 silenced two stage motor. • Suction system with by-pass cooling. • Plastic tank (PP). • Professional closing hooks. • Tilting tank. • Fully removable tank. • Static electric shock inhibitor. • Shock proof trolley. • Liquid float valve. • Cloth filter. • 10 m power cable. • Easy standing head (during filter cleaning). • Cable holder. • Traceless wheels. • Accessories Ø 40.

TECHNICAL DATA

	Domus PR
code	40005-00009
voltage	220-240V ~ 50-60Hz
n°motors - power (max)	2 - 2000 (2400) W silenced two stage motor
column depression	22 kPa/2240 mmH_2O
air suction	108 l/s
total volume/dust/liquid	78 l./35 l./48 l.
dimension (cm)/weight	62x51x99/28,5 kg

PLUS

Anti-tipping head support, very useful while filter cleaning or when opening the tank for emptying

Shock proof trolley with two front pivoting wheels and two big rear wheels for better stability and easy movement

Antistatic device eliminating those annoying magnetic fields that can form inside the tank due to the high speed movement of particles. Improves user's comfort of use

Tilting plastic tank for easy emptying and fully removable tank if necessary

STANDARD EQUIPMENT

• 00080-03979 Hose 2,5 m	• 10001-09446	• 00080-01931	• 00080-01932	• 00080-01956
• 00080-01957	• 00080-01958	• 00070-00679 Cloth filter		

OPTIONAL

• 10001-08169 Paper collector filter set (10 pcs)	• 10001-09545 Cloth filter for fine dust	• 10001-08208 Nylon filter	• 10001-08168 Washable filter	• 10001-08178 Hepa filter

Domus IF

MORE INFO

CHARACTERISTICS

• 2 silenced two stage motor. • Suction system with by-pass cooling. • Stainless steel tank. • Professional closing hooks. • Static electric shock inhibitor. • Drain hose system. • Shock proof trolley. • Liquid float valve. • Cloth filter. • 10 m power cable. • Easy standing head (during filter cleaning). • Traceless wheels. • Accessories Ø 40.

TECHNICAL DATA

	Domus IF
code	40005-00023
voltage	220-240V ~ 50-60Hz
n°motors - power (max)	2 - 2000 (2400) W silenced two stage motor
column depression	22 kPa/2240 mmH_2O
air suction	108 l/s
total volume/dust/liquid	78 l./35 l./48 l.
dimension (cm)/weight	62x51x85/28 kg

PLUS

Anti-tipping head support, very useful while filter cleaning or when opening the tank for emptying

Anti-corrosion stainless steel tank and liquid float valve for liquid suction

Drain hose system for tank easy emptying

Shock proof trolley with two front pivoting wheels and two big rear wheels for better stability and easy movement

STANDARD EQUIPMENT

• 00080-03979 Hose 2,5 m	• 10001-09446	• 00080-01931	• 00080-01932	• 00080-01956
• 00080-01957	• 00080-01958	• 00070-00679 Cloth filter		

OPTIONAL

• 10001-08169 Paper collector filter set (10 pcs)	• 10001-09545 Cloth filter for fine dust	• 10001-08208 Nylon filter	• 10001-08168 Washable filter	• 10001-08178 Hepa filter

Domus IR

MORE INFO

CHARACTERISTICS

• 2 silenced two stage motor. • Suction system with by-pass cooling. • Stainless steel tank. • Professional closing hooks. • Static electric shock inhibitor. • Tilting tank. • Fully removable tank. • Shock proof trolley. • Liquid float valve. • Cloth filter. • 10 m power cable. • Easy standing head (during filter cleaning). • Cable holder. • Traceless wheels. • Accessories Ø 40.

TECHNICAL DATA

	Domus IR
code	40005-00001
voltage	220-240V ~ 50-60Hz
n°motors - power (max)	2 - 2000 (2400) W silenced two stage motor
column depression	22 kPa/2240 mmH_2O
air suction	108 l/s
total volume/dust/liquid	78 l./35 l./48 l.
dimension (cm)/weight	62x51x99/32 kg

PLUS

Anti-tipping head support, very useful while filter cleaning or when opening the tank for emptying

Shock proof trolley with two front pivoting wheels and two big rear wheels for better stability and easy movement

Antistatic device eliminating those annoying magnetic fields that can form inside the tank due to the high speed movement of particles. Improves user's comfort of use

Tilting anti-corrosion stainless steel tank for easy emptying and fully removable tank if necessary

STANDARD EQUIPMENT

• 00080-03979 Hose 2,5 m	• 10001-09446	• 00080-01931	• 00080-01932	• 00080-01956
• 00080-01957	• 00080-01958	• 00070-00679 Cloth filter		

OPTIONAL

• 10001-08169 Paper collector filter set (10 pcs)	• 10001-09545 Cloth filter for fine dust	• 10001-08208 Nylon filter	• 10001-08168 Washable filter	• 10001-08178 Hepa filter

Taurus PR

MORE INFO

CHARACTERISTICS

• 3 silenced two stage motor. • Suction system with by-pass cooling. • Plastic tank (PP). • Professional closing hooks. • Tilting tank. • Fully removable tank. • Static electric shock inhibitor. • Shock proof trolley. • Liquid float valve. • Cloth filter. • 10 m power cable. • Easy standing head (during filter cleaning). • Cable holder. • Traceless wheels. • Accessories Ø 40.

TECHNICAL DATA

	Taurus PR
code	40004-00008
voltage	220-240V ~ 50-60Hz
n°motors - power (max)	3 - 3000 (3600) W silenced two stage motor
column depression	22 kPa/2240 mmH_2O
air suction	162 l/s
total volume/dust/liquid	78 l./35 l./48 l.
dimension (cm)/weight	62x51x99/29,5 kg

PLUS

Anti-tipping head support, very useful while filter cleaning or when opening the tank for emptying

Shock proof trolley with two front pivoting wheels and two big rear wheels for better stability and easy movement

Antistatic device eliminating those annoying magnetic fields that can form inside the tank due to the high speed movement of particles. Improves user's comfort of use

Tilting plastic tank for easy emptying and fully removable tank if necessary

STANDARD EQUIPMENT

• 00080-03979 Hose 2,5 m	• 10001-09446	• 00080-01931	• 00080-01932	• 00080-01956
• 00080-01957	• 00080-01958	• 00070-00679 Cloth filter		

OPTIONAL

• 10001-08169 Paper collector filter set (10 pcs)	• 10001-09545 Cloth filter for fine dust	• 10001-08208 Nylon filter	• 10001-08168 Washable filter	• 10001-08178 Hepa filter

Taurus IR

MORE INFO

CHARACTERISTICS

• 3 silenced two stage motor. • Suction system with by-pass cooling. • Stainless steel tank. • Professional closing hooks. • Static electric shock inhibitor. • Tilting tank. • Fully removable tank. • Shock proof trolley. • Liquid float valve. • Cloth filter. • 10 m power cable. • Easy standing head (during filter cleaning). • Cable holder. • Traceless wheels. • Accessories Ø 40.

TECHNICAL DATA

	Taurus IR
code	40004-00001
voltage	220-240V ~ 50-60Hz
n°motors - power (max)	3 - 3000 (3600) W silenced two stage motor
column depression	22 kPa/2240 mmH_2O
air suction	162 l/s
total volume/dust/liquid	78 l./35 l./48 l.
dimension (cm)/weight	62x51x99/33 kg

PLUS

Anti-tipping head support, very useful while filter cleaning or when opening the tank for emptying

Shock proof trolley with two front pivoting wheels and two big rear wheels for better stability and easy movement

Antistatic device eliminating those annoying magnetic fields that can form inside the tank due to the high speed movement of particles. Improves user's comfort of use

Tilting anti-corrosion stainless steel tank for easy emptying and fully removable tank if necessary

STANDARD EQUIPMENT

• 00080-03979 Hose 2,5 m	• 10001-09446	• 00080-01931	• 00080-01932	• 00080-01956
• 00080-01957	• 00080-01958	• 00070-00679 Cloth filter		

OPTIONAL

• 10001-08169 Paper collector filter set (10 pcs)	• 10001-09545 Cloth filter for fine dust	• 10001-08208 Nylon filter	• 10001-08168 Washable filter	• 10001-08178 Hepa filter

Taurus IR 2 Way

MORE INFO

CHARACTERISTICS

• 3 silenced two stage motor. • Stainless steel tank. • Professional closing hooks. • Static electric shock inhibitor. • Suction system with by-pass cooling. • Tilting tank. • Fully removable tank. • Shock proof trolley. • Liquid float valve. • Cloth filter. • 10 m power cable. • Easy standing head (during filter cleaning). • Cable holder. • Traceless wheels. • Accessories Ø 40.

TECHNICAL DATA

	Taurus IR 2 Way
code	40004-00023
voltage	220-240V ~ 50-60Hz
n°motors - power (max)	3 - 3000 (3600) W silenced two stage motor
column depression	22 kPa/2240 mmH_2O
air suction	162 l/s
total volume/dust/liquid	78 l./35 l./48 l.
dimension (cm)/weight	62x51x99 /33 kg

PLUS

Anti-tipping head support, very useful while filter cleaning or when opening the tank for emptying

Shock proof trolley with two front pivoting wheels and two big rear wheels for better stability and easy movement

Additional hose connection to allow two operators to work simultaneously

Tilting anti-corrosion stainless steel tank for easy emptying and fully removable tank if necessary

STANDARD EQUIPMENT

• 2 x 00080-03990 Hose 5 m	• 2 x 00080-01931	• 2 x 00080-01932	• 00070-00679 Cloth filter	

OPTIONAL

• 10001-09446 - Ø 40 chromium plated steel curve and extension pipe kit	• 10001-09441 - Ø 40 complete accessories kit (holder accessories, floor brush, wet tool, carpet tool)	• 10001-08208 Cloth filter for fine dust.		

Why wider filtering area is not making automatically a better machine?

In the industrial sector, productivity, resistance and breakeven expectations are growing.
The ideal vacuum would be then a machine filtering any kind of dust (also the thinnest) being able to work continuously without the need to clean the filter and without any maintenance.
It is more important to get close effectively to this target rather than the way we can reach this. This is the reason why is useless having a big filtering area if the filter is still clogging up fast and more often I need to stop working to clean it.
In our machines we developed the best prevention of the problem (avoiding dust is reaching quickly the filter) rather than trying a solution afterwards (since the filter is clogging up quickly, extending the filtering area it is supposed to extend the effectiveness). It doesn't matter how wide is the filter, but for how long can work the machine without the need to clean the filter…
And with this issue, we are the best.

When either more airflow or more depressure is necessary?

The airflow helps the dirt transport trough long pipes. Longer is the hose, better is bigger airflow; still with light dust it is better having lower depressure: the inlet air speed will be lower, the harder the dirt is getting in touch with the filter.
When residuals have high specific weight, depressure is more important than airflow to win gravity force of dirt
attached to the surface.

• **Number of motors**
It explains how many motors there are in the vacuum cleaner. Ignition is independent in order to increase progressively the performances. The working system (whenever it is more than one) is in parallel, so the air suction increases and the depressure is steady whenever the motors are progressively switched on.

• **Cloth filter**
The cloth consistency and its shape allow a simple cleaning phase and the re-usage of the filter. It can be used only for vacuuming dry waste; if combined with nylon filter it is possible to work for a longer period of time.

• **Cartridge filter**
The continuous folders arranged in circle allow a higher filtering surface in a smaller area.
More cleaning autonomy with a thin filtering action. It can be used only for vacuuming dry waste and it is re-usable.

• **Multipurpose washable filter**
It combines all the advantages of the cartridge filter but with the plus that it can vacuum both dry and wet at the same time. It can be washed with tap water.

• **Pocket filter:** has a large filtering surface, guarantees high air filtration efficiency and a notable dust accumulation capacity

• **Integrated submersible pump in the tank**
the draining is continuous and without stopping working.
With this accessory it is possible to push out completely also melting residual up to 20 mm.

• **Automatic self cleaning filter system (international copyright)**
continuous vacuum performance without maintenance filters are automatically cleaned by mechanical vibration. It is not necessary to touch the filter or clean it outside the vacuum cleaner spreading again dust everywhere.

• **Manual filter shaker**
Mechanical horizontal and simple manual filter cleaning system

• **Antistatic machine and accessories**
Using specific conductive materials and engineering, there's the prevention of ignition sparks from the machine side, up to the end of any tool available for this machine range.

Nomenclature

S = Universal (motor)
D = Induction (motor)

M = Single phase (motor)
T = Tri-Phase (motor)
V = Varnishing (tank)
X = Stainless steel (tank)

Liters (tank)
x 100 =2400 W

SMX 77 2-24 SH

Dust class
Filter shaker
n° Motor

Technical information

Code	Model	Page	Voltage	Abs. Power	Column depression	Suction air	Tank capacity	Noise level	Filtering surface	Packaging	Packaging weight	Packaging weight	Pieces for pallet
			V~Hz (Ph)	W	kPa	l/s	l	dB(A)	cm²	cm L x l x H	kg	lbs	n°
40033-00003	SMX-R 80 3-36S DS	202	230 V~50-60 Hz (1Ph)	3000	24 kPa	162 l/s	80 l.	76 dB(A)	4460 cm²	70x91x141	66	145,5	1

Code	Model	Page	Voltage	Abs. Power	Column depression	Suction air	Tank capacity	Noise level	Filtering surface	Packaging	Packaging weight	Packaging weight	Pieces for pallet
			V~Hz (Ph)	W	kPa	l/s	l	dB(A)	cm²	cm L x l x H	kg	lbs	n°
40034-00001	DMX-R 80 1-22	204	230 V~50 Hz	2200	25 kPa	97 l/s	80	<74 dB(A)	4300 cm²	78x66x175	80	176	1
40034-00002	DTX-R 80 1-30	204	400 V~50 Hz (3Ph)	3000	32 kPa	97 l/s	80	<74 dB(A)	4300 cm²	78x66x175	85	187	1

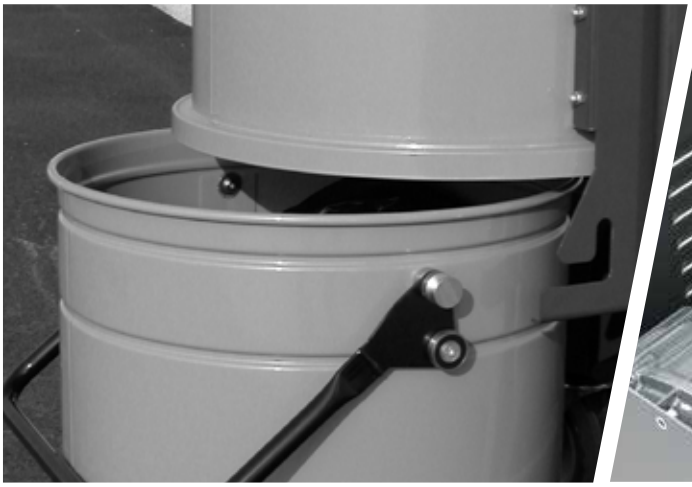

LAVOR

SMX-R 80

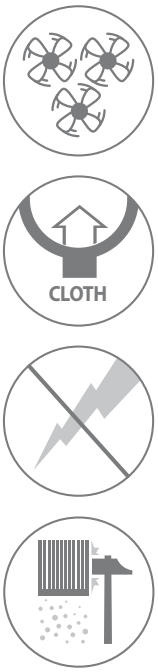

MORE INFO

CHARACTERISTICS

• 3 silenced two stage by-pass cooling motors • Stainless steel container • Mechanical horizontal and simple manual filter cleaning system • Steel closing hooks • Static electric shock inhibitor • Power coated steel structure • Trolley with front pivoting non-marking wheels (with breake) & large inbuilt accessories basket • Liquid float valve. • Drain System

TECHNICAL DATA

	SMX-R 80 3-36S DS
code	40033-00003
abs. power W	3000
n°/type motor	3 x two stages universal
max vacuum (actual)	24 kPa (2400 mmH_2O)
max Airflow	162 l/s
container capacity	80 l
noise level	76 dB(A)
voltage	220-240 V~50-60 Hz (1Ph)
inlet Ø - type (s=straight; t=tangential)	70 mm - s
filtering capacity/surface	5 µm/ 4460 cm^2
cable lenght	7,5 m
dimension (cm)/weight	68x58x130/45Kg

PLUS

3 double stage silenced motors, suction system with by-pass cooling, liquid float valve and antistatic device

80 litres stainless steel tank

Cloth filter and manual filter shaker that keeps the filter clean thanks to a simple manual swing mechanism

Power coated steel structure with front pivoting non-marking wheels with brakes and large inbuilt storage compartment

STANDARD EQUIPMENT

• 00070-00679 - Cloth filter	• 00014-02300 Quick release adaptor Ø70-50 (1x)			

There isn't any hose or tool provided within the unit.

OPTIONAL

• 10001-09534 **KIT 1 for industrial cleaning, included:** • 00014-02293 2 x Accessories sleeve eva Ø 50 • 00080-01831 4 x Eva conductive flexible hose Ø 50 (mt 4) • 00026-01129 Steel handle Ø50 • 00080-04097 Dust inox tool • 00080-01589 PVC flat lance with galvanized joint Ø50 • 00080-01590 PVC round brush with galvanized joint Ø50				
• 10001-09535 **KIT 2 for oil and swarf cleaning, included:** • 00014-02292 2 x Accessories sleeve PUR/PVC Ø 50 • 00080-01833 4 x Pur antistatic flexible hose Ø 50 (mt 4) • 00040-01251 Galvanized chip basket • 00080-01587 Rubber antistatic round lance Ø50				
Optional minimum set to run the unit: • 10001-09372 3m complete EVA Ø50 hose set (1x) + 00080-01589 adapter				

DMX-R 80/DTX-R 80

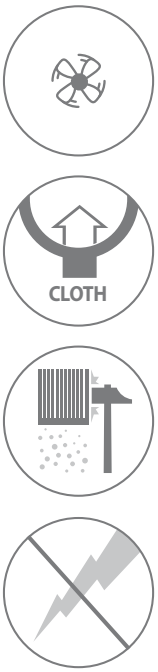

MORE INFO

CHARACTERISTICS

• IP 55 silenced turbine motor • Stainless steel container • Mechanical horizontal & simple manual filter cleaning system • Steel closing hooks • Static electric shock inhibitor • Power coated steel structure and containers • Steering wheels with brake.• Liquid float valve • Pressure relief valve, safety device avoiding engine problems in case of clogging • Drain hose system • Quick release tank system

TECHNICAL DATA

	DMX-R 80 1-22	DTX-R 80 1-30
code	40034-00001	40034-00002
abs. power W	2200	3000
n°/type motor	1/induction	1/induction
max vacuum (actual)	21/25 kPa (2100/2500 mmH_2O)	25/32 kPa (2500/3200 mmH_2O)
max Airflow	97 l/s	97 l/s
container capacity	80 l.	80 l.
noise level	74 dB(A)	74 dB(A)
voltage	230 V~50 Hz (1Ph)	400 V~50 Hz (3Ph)
inlet Ø - type (s=straight; t=tangential)	40 mm - s	40 mm - s
filtering capacity/surface	5 µm/ 4300 cm^2	5 µm/ 4300 cm^2
cable lenght	10 m	10 m
dimension (cm)/weight	47x71x115/70 Kg	47x71x115/70 Kg

PLUS

IP 55 silenced turbine motor and pressure relief valve

Filter shaker that keeps the filter clean thanks to a simple manual swing mechanism

Drain hose system for tank easy emptying

Accessories diameter 40 mm

RECOMMENDED FOR: car wash sector

STANDARD EQUIPMENT

• Flexible hose ø 40 - 3 m code 00080-04012	• Flat lance ø 40 code 00080-01931	• Cloth filter code 00070-00679		

OPTIONAL

• Washable filter 10001-08168	• Kit 10001-09435		• 00080-03979 Flex hose 2,5m Ø40	• 00080-04005 Flex hose 4m Ø40
• 00080-03990 Flex hose 5m Ø40	• 10001-09446 KIT chromium plated pipe + curved chromium plated pipe Ø 40 mm	• 00080-01932 Roud brush - Ø 40 mm	• 00080-01956 Multipurpose accessories Ø 40 mm - 400 mm • 00080-02015 Multipurpose accessories Ø 40 mm - 300 mm	• 00080-01957 Bristle accessory for dry suction (for floors) 400 mm • 00080-02004 Bristle accessory for dry suction (for floors) 300 mm
• 00080-01958 Accessory for wet suction 400 mm • 00080-02005 Accessory for wet suction 300 mm	• 00080-01959 Accessory for carpet 400 mm • 00080-02006 Accessory for carpet 300 mm	• 00014-01444 Flexible hose Ø40 mm - 30 m		

Injection extraction range

Lavor professional extraction/injection machines: **Hydrus**, **Jupiter**, **Apollo**, **Solaris**, **Costellation** are the real solution to clean any type of textiles!
Machines equipped with 6,5 up to 78 liters tanks, 1 or 2 double stage motors, 1 or 2 detergent pumps to assure always the right flow of injected chemical.
Provided with a full range of accessories capable to suit each deep cleaning textile application: carpets, vehicle seats, sofas, tents, chairs, mats, etc… To be used in the **HO-RE-CA**, **Automotive** and **Industrial** cleaning, they will perfectly fit any requirements.
A range of injection/extraction cleaning machines ideal for car cleaning, as they can be used with thick foam or liquid detergent.
Equipped with a connection for compressed air with pressure regulator and an external tank of 12 liters capacity, which allows detergent refilling without opening the machine.

• Number of motors
It explains how many motors there are in the vacuum cleaner. Ignition is independent in order to increase progressively the performances. The working system (whenever it is more than one) is in parallel, so the air suction increases and the depressure is steady whenever the motors are progressively switched on.

• Cloth filter
The cloth consistency and its shape allow a simple cleaning phase and the re-usage of the filter. It can be used only for vacuuming dry waste; if combined with nylon filter it is possible to work for a longer period of time.

• Paper collector filter
Allows filtering and collection (with a valve) of rough dirt without dirty the tank whenever it is time to replace it. It is useful for dry waste, also in combination of other thinner filters.

• Multipurpose washable filter
It combines all the advantages of the cartridge filter but with the plus that it can vacuum both dry and wet at the same time. It can be washed with tap water.

• Antistatic machines and accessories
Using specific conductive materials and engineering, there's the prevention of ignition sparks from the machine side, up to the end of any tool available for this machine range.

• Unlimited autonomy
The boiler is refilled by a water pump that gets water from an external water tank. This system allows an unlimited autonomy, because it is not necessary to turn off the steam generator and wait a lower temperature to refill with water.
An automatic control recharges the boiler when necessary. In some models there is an acoustic signal advising about low water level inside the water tank.

Hydrus

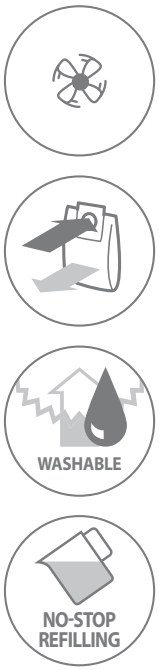

MORE INFO

CHARACTERISTICS

• Silenced single stage motor. • Suction system with by-pass cooling. • 20 lt. plastic tank (PP) • 2 lt. Solution tank • Shock proof trolley. • Liquid float valve. • 7,5 m power cable. • Washable filter • Paper collector filter • Detergent pump 48W - 0,7 l/min - 7 bar max • Accessories Ø 35. • No stop refilling, unlimited autonomy

TECHNICAL DATA

	Hydrus
code	40003-00009
voltage	230V ~ 50Hz
n°motors - power (max)	1 - 1200 (1400) W
column depression	27 kPa/2700 mmH_2O
air suction	70 l/s
total volume	20 l.
dimension (cm)/weight	40x39x64/9,5 kg

PLUS

Motor with suction system with by-pass cooling. Detergent pump 48W – 0,7 l/min – 5 bar

20 litres plastic tank

Shock proof trolley with two front pivoting wheels and two big rear wheels for better stability and easy movement

2 l detergent solution tank, instantly rechargeable when the indicator light turns on, unlimited autonomy

STANDARD EQUIPMENT

• 10001-09516 Hose 2 m	• 00080-01796	• 00080-03058	• 00080-03037	• 00080-01912
• 00080-03729	• 00080-01911	• 00080-02017	• 00080-02016	• 10001-08251 Washable filter
• 00070-00533	• 00070-00535			

OPTIONAL

• 00073-00142 LC-PREFOAM (no foaming system)	• 10001-09542 Antifoam device			

Jupiter

MORE INFO

CHARACTERISTICS

• Spray-extraction cleaner with a separate anti-foaming tank. • Designed for rug, carpet, and upholstery cleaning in offices, clinics, cinemas and households, as well as car upholstery. • Thorough cleaning through the 4 bar spray pressure and 230 mbar suction power. • Spray and extraction functions are separately operable. • Separate fresh and wastewater tanks, each containing 6,5 l. Separate container for anti-foaming agent. • Clear, ergonomic nozzles. • Long stainless steel vacuum tube for convenient, effortless work. • 7,5 m power cable. • Rubber-coated castor wheels and large back wheels.

TECHNICAL DATA

	Jupiter
code	40038-00001
voltage	220-230V ~ 50-60Hz
n°motors - power (max)	1 - 1100 W
column depression	23 kPa/2300 mmH_2O
air suction	50 l/s
total volume/dust/liquid	6,5 l./5 l./6 l.
dimension (cm)/weight	55 x 35 x 63,5/13 kg

PLUS

Long stainless steel vacuum tube for convenient, effortless work

Thorough cleaning through the 4 bar spray pressure and 230 mbar suction power

Professional plastic hooks

Rubber-coated castor wheels and large back wheels.

STANDARD EQUIPMENT

• 00080-01637 Hose 2,5 m	• 2 x 00014-01066	• 00080-03139	• 00080-03140	

Apollo IF

MORE INFO

CHARACTERISTICS

• Silenced two stage motor. • Suction system with by-pass cooling. • Stainless steel tank. • Detergent pump (1x26W – 1,2 l/m – 2,5bar) • Professional closing hooks. • Static electric shock inhibitor. • Drain hose system. • 11 l. detergent tank. • Shock proof trolley. • Liquid float valve. • Cloth filter. • 10 m power cable. • Easy standing head (during filter cleaning). • Traceless wheels. • Accessories Ø 40.

TECHNICAL DATA

	Apollo IF
code	40010-00001
voltage	220-240V ~ 50Hz
n°motors - power (max)	1 - 1200 (1400) W
column depression	21,6 kPa/2200 mmH_2O
air suction	53 l/s
total volume/dust/liquid	50 l./21 l./35 l.
dimension (cm)/weight	62x51x85/22 kg

PLUS

Double stage motor, suction system with by-pass cooling, float valve and antistatic device

Detergent pump 26W – 1,2 l/m – 2,5 bar

Shock proof trolley with two front pivoting wheels and two big rear wheels for better stability and easy movement, 11 l detergent solution tank and 50 l stainless steel tank

Drain hose system for tank easy emptying

STANDARD EQUIPMENT

• 10001-09449 Hose 2,5 m	• 10001-09452	• 00080-03052	• 10001-09339	• 10001-09337 Cloth filter

OPTIONAL

• 10001-08169 Paper collector filter set (10 pcs)	• 10001-08209 Nylon filter	• 10001-08251 Washable filter	• 10001-08252 Cartridge filter	• 10001-08253 HEPA filter

Solaris IF

MORE INFO

CHARACTERISTICS

• Silenced two stage motor. • Suction system with by-pass cooling. • Stainless steel tank. • Detergent pump (2x48W – 1 l/m – 7 bar). • Professional closing hooks. • Static electric shock inhibitor. • Drain hose system. • 25 l. detergent tank. • Shock proof trolley. • Liquid float valve. • Cloth filter. • 10 m power cable. • Easy standing head (during filter cleaning). • Traceless wheels. • Accessories Ø 40.

TECHNICAL DATA

	Solaris IF
code	40011-00002
voltage	220-230V ~ 50Hz
n°motors - power (max)	2 - 2200 (2400) W silenced two stage motor
column depression	22 kPa/2240 mmH_2O
air suction	108 l/s
total volume/dust/liquid	78 l./35 l./48 l.
dimension (cm)/weight	62x51x96/33 kg

PLUS

2 double stage motors, suction system with by-pass cooling, float valve and antistatic device

2 detergent pumps 48W – 1 l/m – 7 bar

Shock proof trolley with two front pivoting wheels and two big rear wheels for better stability and easy movement, 25 l detergent solution tank and 78 l stainless steel tank

Drain hose system for tank easy emptying

STANDARD EQUIPMENT

• 10001-09449 Hose 2,5 m	• 10001-09452	• 00080-03052	• 00070-00679 Cloth filter	

OPTIONAL

• 10001-08169 Paper collector filter set (10 pcs)	• 10001-09545 Cloth filter for fine dust	• 10001-08208 Nylon filter	• 10001-08168 Washable filter	• 10001-08178 HEPA filter

Costellation IR

MORE INFO

CHARACTERISTICS

• 2 silenced two stage motor. • Suction system with by-pass cooling. • Stainless steel tank. • Detergent pump (2x48W – 0,7-1,2 l/m – 5 bar). • Professional closing hooks. • Static electric shock inhibitor. • Tilting tank. • Fully removable tank. • 11 l. detergent tank. • Shock proof trolley. • Liquid float valve. • Cloth filter. • 10 m power cable. • Easy standing head (during filter cleaning). • Traceless wheels. • Accessories Ø 40.

TECHNICAL DATA

	Costellation IR
code	40011-00008
voltage	220-240V ~ 50Hz
n°motors - power (max)	2 - 2200 (2400) W silenced two stage motor
column depression	22 kPa/2240 mmH_2O
air suction	108 l/s
total volume/dust/liquid	78 l./35 l./48 l.
dimension (cm)/weight	62x51x99/35,5 kg

PLUS

2 double stage motors, suction system with by-pass cooling, float valve and antistatic device

2 detergent pumps 48W – 0,7/1,2 l/m – 5 bar

Shock proof trolley with two front pivoting wheels and two big rear wheels for better stability and easy movement, 11 l detergent solution tank and 78 l stainless steel tank

Tilting anti-corrosion stainless steel tank for easy emptying and fully removable tank if necessary

STANDARD EQUIPMENT

• 10001-09449 Hose 2,5 m	• 10001-09452	• 00080-03052	• 00070-00679 Cloth filter	

OPTIONAL

• 10001-09545 Cloth filter for fine dust	• 10001-08208 Nylon filter	• 10001-08168 Washable filter	• 10001-08178 HEPA filter	

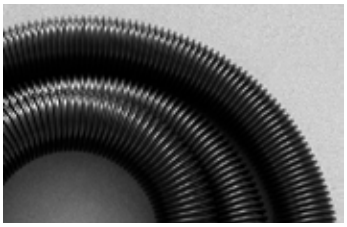

Flexible hose Ø 35

Code	Description	m	Ø
00014-01446	Roll of flexible hose without swivel	30	35

	Code	Description	Ø
	00014-02331	Sleeve tank side	35
	00009-02504	Swivel straight accessories side	35
	00026-01126	Swivel curved accessories side	35

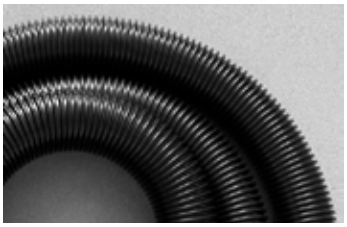

Flexible hose Ø 40

Code	Description	m	Ø
00014-01444	Roll of flexible hose without swivel	30	40

	Code	Description	Ø
	00014-02334	Sleeve tank side	40
	00014-02333	Straight accessories side	40

Complete flexible hose Ø 40

Code	Description	m	Ø
00080-03990	Flexible hose	5	40
10001-09450	Flexible hose for Injection extraction	5	40
10001-09451	Flexible hose for Injection extraction	10	40

PVC spacer

Code 00035-00531

Ø 40 Spacer for plastic bag 58 l. (for Domus/Taurus/Solaris/Costellation models)
This accessory is necessary when using collector bag: the use of collector bag is not possible without PVC spacer.
The use of the collector bag grants easy filter cleaning and its quick replacement whenever necessary, saving time also during the operation of tank cleaning.

Gangway tool (only for liquid suction)

Code 00080-03076

Ø 40 Gangway tool (only for Domus PR/Domus IR/Taurus PR/ Taurus IR/Costellation IR models)

A set made of special accessory with front and back squeegee + a flex connection hose in order to vacuum easily and quickly water and liquid from the floor.

00085-02558 front squeegee strip with hole
00085-02559 rear squeegee strip without hole

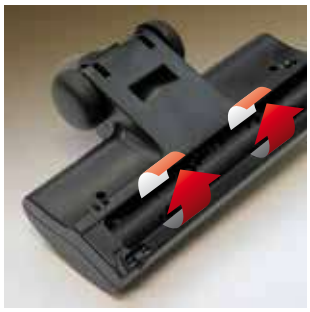

Turbo brush Ø 35

Code 00080-01955

Antifoam device

Code 00080-03080

This device avoids the forming of foam that may affect the operation of the float.
(For Zeus, Domus, Taurus, Apollo, Solaris, Costellation models)

Which are key components in a single disc machine?

The procedure to choose the right product for specific application must take into consideration of: the weight (that is the pressure over the brush), the surface to work, the RPM / type of construction of the motor and the transmission type.
Generally speaking, the lower is the rotation speed, the most effective is the pressure over the brush and deeper is dirt removal.
With the increasing of rotation speed, lower is the effect of the pressure over the floor.
Different accessories combinations, rotation speed and motor power can provide the solution for any application: from dewaxing or deep scrub, up to polishing or buffing; from the crystallization up to spray cleaning; also carpet cleaning or sanding. Please see application chapter on the next pages.

How much power is necessary?

There is not a set rule, if not the common sense: higher is the friction over the floor (a combination of type of working, type of surface and type of accessory used), the higher will be the power request to the motor. So more powerful is the motor, the harder the job being able to be done.

The power is nothing without control....

Together with its construction simplicity there are the worst danger for the operator who has to control the machine for long working sessions.
Only the perfect components and weights distribution on the machine allows a perfect balanced and ergonomic working posture, without any vibration and any strange effort to keep it in place.
A cheap construction (less strength) not considering the perfect ergonomic for the user, further to the waste of money (less productivity), it's a serious danger for the health!

Application	Page	Code	Ø brush	Stripping synthetic floor (PVC)	Stripping cork present floor (linoleum)	Wet scrubbing/basic cleaning of stones, tiles and lino (sensitive floors)	Wet scrubbing/basic cleaning of synthetic or non sensitive floors pvc	Crystallizing	Carpet shampooing	Sanding wood	Sanding cement	Spray polishing and buffing
SDM-R 45 G 16-130	222	46001-00027	430 - 17″	•	•	•	•	•	•	•		
SDM-R 45 G 16-160	222	46001-00028	430 - 17″	•	•	•	•	•	•		•	
SDM-R 45 G 16-180	222	46001-00029	430 - 17″	•	•	•	•	•	•			
SDM-R 53 G 150-130	224	46001-00030	510 - 20″									•

- **Brush speed**
Means Rotation Per Minute of the brush.

- **Constant brush pressure**
The pressure of brushes on the floor is made by the heavy brush plate that follows irregularity on the floor and gives always the top pressure without any adjustment still with shorter bristles.

Applications pads

MICROFIBER PAD - Ideal for “gres & porcelain” and carpet/moquette if used with dried foam shampoo.

BEIGE PAD - POLISHING - Polyester To polish all kinds of floor. Use dry.

GREEN PAD - INTERMEDIATE CLEANING ACTION - Nylon To remove all the old superficial wax, rests, obtaining ready floors to be recoated. Use wet.

BLACK PAD - WET STRIPPING - Nylon For wet stripping of heavy layers of wax. Ideal to remove old floor finish scu and cement marks.

SDM-R 45 G

BRUSH
NOT INCLUDED

Kg

RPM
165

MORE INFO

CHARACTERISTICS

• Complete range of single disc machines professional, sturdy, manageable, practical and simple to use. • Ergonomic handle with integrated safety controls. • Strong handle joint. • Powerful and noiseless motor. • Adapted in order to satisfy all the cleaning requirements, marble restoration and treatment and natural stones, woods and parquet, moquette, dewaxing, hard scrubbing.

TECHNICAL DATA

	SDM-R 45G 16-130	SDM-R 45G 16-160	SDM-R 45G 16-180
code	46001-00027	46001-00028	46001-00029
type	low speed	low speed	low speed
brush speed	165 RPM	165 RPM	165 RPM
scrubbing width	430 mm	430 mm	430 mm
voltage	230V / 50HZ	230V / 50HZ	230V / 50HZ
abs. power	1300 W	1600 W	1800 W
transmission		helical gear system	
brush contact pressure	40,8 g/cm²	41,3 g/cm²	44,3 g/cm²
noise level	60 dB(A)	60 dB(A)	60 dB(A)
cable lenght	12 m	12 m	12 m
body height	280 mm	280 mm	280 mm
dimension (cm) / weight	54,2x42,5x120/35 Kg	54,2x42,5x120/41 Kg	54,2x42,5x120/52 Kg

PLUS

Ergonomic handle with integrated safety controls

Powerful and noiseless motor

Helical gear system granting continuous power, long life and noiselessness of the machine

Strong handle joint

Accessories and brushes are not included. For available accessories refer to accessories below.

OPTIONAL

• 00054-00587 Tank 10 l	 • 00080-04121 carpet brush	 • 00080-04114 scrubbing brush pp 0,6	 • 00080-04111 tynex brush	 • 00080-03128 EWU pad holder
 • 00080-03124 Abrasive disc holder	 • 00080-03132 carborondum disc	 • 10001-10770 Pad microfiber 5 pcs	 • 10001-09937 Pad red 5 pcs	 • 10001-09918 Pad green 5 pcs
 • 10001-09923 Pad black 5 pcs	 • 10001-10769 Pad silver inox 5 pcs	 • 00080-01628 Emery paper GR24 disc	 • 00080-01629 Emery paper GR60 disc	 • 00080-03130 Vidia disc GR24
 • 00080-03131 Vidia disc GR36				

SDM-R 53 G

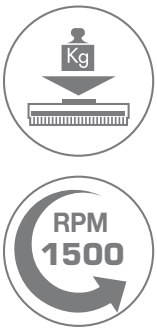

MORE INFO

CHARACTERISTICS

• Professional ultra-highspeed and high efficiency single disc machine ideal for polishing whichever type of natural or treated with metalized waxes floors (brush not included). • Ergonomic handle with integrated controls and sturdy joint. • Powerful and quiet motor. • Vacuum system. Inlcuding a paper collector bag (5 pcs set optional, code 00070-00422). • Flexible disc holder counterbalancing eventual unevenness • Pad holder included

TECHNICAL DATA

	SDM-R 53G 150-130
code	46001-00030
type	High speed
brush speed	1500 RPM
scrubbing width	510 mm
voltage	230V/50HZ
abs. power	1300 W
transmission	direct belt transmission
brush contact pressure	22 g/cm² adjustable
noise level	56 dB(A)
cable lenght	12 m
body height	280 mm
dimensions / weight	88 x 55 h 125 cm/48,8 Kg

PLUS

Ergonomic handle with integrated safety controls

Strong handle joint

Flexible disc-holder counterbalancing eventual unevenness (disc not included)

Vacuum system, including a paper collector bag

Brushes are not included. For available accessories refer to accessories below.

OPTIONAL

• 00070-00422 Paper collector bag (5 pcs).	 • 10001-07815 5x Abrasive disc. blue			

Application

	Description	Code	Models	Stripping synthetic floor (PVC)	Stripping cork present floor (linoleum)	Wet scrubbing/basic cleaning of stones, tiles and lino (sensitive floors)	Wet scrubbing/basic cleaning of synthetic or non sensitive floors pvc	Crystallizing	Carpet shampooing	Sanding wood	Sanding cement	Spray cleaning	Spray polishing and buffing
Brushes (*)													
	Carpet brush	00080-04121	SDM-R 45G						x				
	Scrubbing brush PP 0,6 mm	00080-04114	SDM-R 45G		x	x							
	Tynex brush	00080-04111	SDM-R 45G	x			x						
Pad Holder													
	EWU pad holder	00080-03128	SDM-R 45G	x	x	x	x	x			x	x	
	Abrasive Disc Holder	00080-03124	SDM-R 45G							x	x		
	Abrasive disc. blue with pad holder included	10001-07815	SDM-R 53G										x

	Description	Code	Models	Stripping synthetic floor (PVC)	Stripping cork present floor (linoleum)	Wet scrubbing/basic cleaning of stones, tiles and lino (sensitive floors)	Wet scrubbing/basic cleaning of synthetic or non sensitive floors pvc	Crystallizing	Carpet shampooing	Sanding wood	Sanding cement	Spray cleaning	Spray polishing and buffing
Special Disc													
	Carborondum disc	00080-03132	SDM-R 45G								x		
Pads													
	Pad micro fiber 5 pcs	10001-10770	SDM-R 45G						x				
	Pad red 5 pcs	10001-09937	SDM-R 45G			x						x	
	Pad green 5 pcs	10001-09918	SDM-R 45G		x		x						
	Pad black 5 pcs	10001-09923	SDM-R 45G	x									
	Pad silver Inox 5 pcs	10001-10769	SDM-R 45G					x					
	Emery paper GR24 disc	00080-01628	SDM-R 45G							x			
	Emery paper GR60 disc	00080-01629	SDM-R 45G							x			
	Vidia disc GR24	00080-03130	SDM-R 45G								x		
	Vidia disc GR36	00080-03131	SDM-R 45G								x		

X = suitable

Direct experience of professional people has resulted in Lavor floor scrubbers range: easy to handle, powerful, efficient, carefully conceived and designed by using top-quality materials.

Why cilindric brush?
High speed rotation for a polishing effect; great dirt degrease in floors with grout ; possibility to link together the sweeping function; the rotation direction assists forwarding in models without traction.

Why disc brush?
Extended mechanical action of the bristles on the floor, ideal for persistent dirt: the special setting of the brush plate allows a balanced gripping effect, assisting easy use in the non traction models. Complete cleaning also next to walls is possible and the compact washing element lower at the sides is studied to scrub also under edges.

How a squeegee should be designed?
The shape and the material used grant a perfect drying in every condition, also on floors with grout or when quick U turns are necessary.
The floating body can stay in the machine operating space (compact/room saving)
The manual adjusting system grants a perfect drying on each kind of floors.

How long do battery charges last?
It is impossible to determine exactly how long a battery charge lasts and so how long a machine can work in autonomy.
Battery autonomy changes depending on type of surface, dirt quantity, brush type and way in which traction system is used (speed and slope).
Battery life is made up of number of charge cycles (also incomplete), if usage conditions, charging and service are perfectly observed.
Manufacturing technology diversifies numbers of cycles, service needed, usage/charging conditions and performances.

• Number of disc brushes
The scrubbing group meets different cleaning path need with 1, 2 or 3 disc brushes.

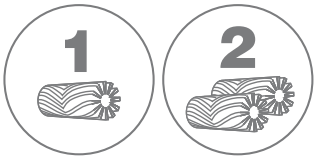

• Number of cilindric brushes
Scrubbing group offer 1 or 2 roller brush solutions together with the sweeping capability. Bristles of different material allows perfect cleaning in any conditions, (carpet and parquet included).

• Cilindric brush quick connection and release:
The fittings and releasing of brushes is toolless. Ordinary cleaning maintenace are simple and quick for anybody.

• Solenoid valve
Together with the reliable mechanical solution faucet, this system reduce chemical consumption and avoid solution waste. The flow is open only when brush is working, there is no accidental leak with machine stopped. The system is protected by a filter with easy maintenance.

• Integrated battery charger
Some models are equipped with integrated battery charger, other ones have the predisposition only. It is possible to charge batteries in different rooms, without coming back to the same place.

• Integrated battery
Standard integrated battery is built with a maintenance free technology and it does not require restrictions about the place for battery charging. The non stop research allow to use always up-to-date batteries that combined with appropriate battery charger grant machine top performances.

• Hour meter
This device allows you to control work sessions (of the machine and the operator) and correctly plan stops to recharge the batteries or maintain the machines. Maximum productivity and investment protection.

• Lithium batteries optional
They provide more power, longer life and much faster charging times.
They are not affected by the memory effect and are lighter in weight with lower maintenance costs.

• Charge meter and battery protection
It informs when the autonomy is finishing , allowing the end of the cleaning task (stopping brushes first and then the rest). It prevents damages to the batteries, preventing the complete discharge with any kind of technologies.

• Eco Energy System
no-stop and separate control of water quantity and chemical product concentration with automatic and delayed stop of the supply when the machine stops (Automatic Detergent Measuring System).

Applications pads

BEIGE PAD - POLISHING
Polyester To polish all kinds of floor. Use dry.

GREEN PAD - INTERMEDIATE CLEANING ACTION - Nylon To remove all the old superficial wax, rests, obtaining ready floors to be recoated. Use wet.

BLACK PAD - WET STRIPPING - Nylon For wet stripping of heavy layers of wax. Ideal to remove old floor finish scu and cement marks.

Nomenclature

Model

Next EVO 66 BTA Li

Scrubbing width

E = ELECTRIC
B = BATTERY
BT = BATTERY with TRACTION
Li = LI-ION BATTERY
A = Automatic brush plate lifting for walk behind

Technical information

Code	Model	Page	Power supply	Brushes	Scrubbing width	Squeegee width	Max working capacity	Solution tank capacity	Recovery tank capacity	Packaging	Weight	Weight	pcs x pallet
			V	n°	mm	mm	m²/h - ft²/h	l/gal	l/gal	L x l x H cm/inc	kg	lbs	n°
37021-00002	Sprinter	232	230V/50HZ	1	290	320	1015-10925	2,8/0,74	5,6/1,48	119X40X37/46x16x14	17	37	10
37021-00004	Crystal Clean	234	230V/50HZ	1	290	320	1015-10925	2,8/0,74	5,6/1,48	119X40X37/46x16x14	19	42	10
37024-00001	Fit 35B Li	236	25,2V	1	390	422	1500-16145	1,9/0,5	1,5/0,39	53x49x29,5/20,8x19,2x11,6	11,3	24	24
37038-00001	Set 43B Li	238	25,6V	2	430	450	1200-12916	5/1,3	8/2,1	53x49x29,5/20,8x19,2x11,6	20	44	-
47001-00001	Ready 32B Li	240	36V	2	320	340	1500-16145	3,5/0,92	6,0/1,59	65x51x36/25,5x20x14	18	39	8
37004-00004	Quick 36E	242	230V/50HZ	1	360	460	1260-13562	11/2,91	12/3,17	81x56x80/32x22x32	62	135	1
37004-00003	Quick 36B	242	12V	1	360	460	1260-13562	11/2,91	12/3,17	81x56x80/32x22x32	70	154	1
37012-00031	Dart 36E	244	230V/50HZ	1	360	460	1260-13562	15/3.96	16/4.23	98x47x78 /39x19x31	79	174	1
37012-00032	Dart 36B	244	24V	1	360	460	1260-13562	15/3.96	16/4.23	98x47x78 /39x19x31	56	147	1
37012-00033	Dart 36B	244	24V	1	360	460	1260-13562	15/3.96	16/4.23	98x47x78 /39x19x31	80	231	1
37011-00051	Dynamic 45E	246	230V/50HZ	1	450	540	1500-16145	30/7,9	35/9,24	117x58x78/46x22x30	88	194	1
37011-00052	Dynamic 45B	246	24V	1	450	540	1500-16145	30/7,9	35/9,24	117x58x78/46x22x30	74	163	1
37011-00053	Dynamic 45B	246	24V	1	450	540	1500-16145	30/7,9	35/9,24	117x58x78/46x22x30	112	247	1
37031-00003	Free EVO 50E	248	230V/50HZ	1	500	800	2000-21527	44/11,63	50/13,21	125x57x116/49,5x22,5x46	117	258	1
37031-00104	Free EVO 50B	248	24V	1	500	800	2000-21527	44/11,63	50/13,21	125x57x116/49,5x22,5x46	83	183	1
37031-00001	Free EVO 50B	248	24V	1	500	800	2000-21527	44/11,63	50/13,21	125x57x116/49,5x22,5x46	84	187	1
37031-00013	Free EVO 50B	248	24V	1	500	800	2000-21527	44/11,63	50/13,21	125x57x116/49,5x22,5x46	138	304	1
37031-00105	Free EVO 50BT	248	24V	1	500	800	2000-21527	44/11,63	50/13,21	125x57x116/49,5x22,5x46	87	187	1
37031-00002	Free EVO 50BT	248	24V	1	500	800	2000-21527	44/11,63	50/13,21	125x57x116/49,5x22,5x46	88	191	1
37031-00016	Free EVO 50BT	248	24V	1	500	800	2000-21527	44/11,63	50/13,21	125x57x116/49,5x22,5x46	142	313	1
37033-00002	Moving 55 E	250	230V/50HZ	1	550	800	2200-23680	55/14,52	60/16	127x65x117/50x25x46	97	218	1
37033-00003	Moving 55 B	250	24V	1	550	800	2200-23680	55/14,52	60/16	127x65x117/50x25x46	99	218	1
37033-00004	Moving 55 B	250	24V	1	550	800	2200-23680	55/14,52	60/16	127x65x117/50x25x46	100	220	1
37033-00005	Moving 55 B	250	24V	1	550	800	2200-23680	55/14,52	60/16	127x65x117/50x25x46	155	341	1
37033-00001	Moving 55 BT	252	24V	1	550	800	2400-25833	55/14,52	60/16	127x65x117/50x25x46	108	238	1

Code	Model	Page	Power supply	Brushes	Scrubbing width	Squeegee width	Max working capacity	Solution tank capacity	Recovery tank capacity	Packaging	Weight	Weight	pcs x pallet
			V	n°	mm	mm	m²/h - ft²/h	l/gal	l/gal	L x l x H cm/inc	kg	lbs	n°
37033-00006	Moving 55 BT	252	24V	1	550	800	2400-25833	55/14,52	60/16	127x65x117/50x25x46	109	240	1
37033-00007	Moving 55 BT	252	24V	1	550	800	2400-25833	55/14,52	60/16	127x65x117/50x25x46	164	361	1
37033-00008	Moving 55 BT	252	24V	1	550	800	2400-25833	55/14,52	60/16	127x65x117/50x25x46	164	361	1
37036-00002	Motion 60 BT	254	24V	2	600	855	3200-34444	70/18,4	83/21,9	133,5x80x105/52,5x31,4x41,3	125	275	1
37036-00004	Motion 60 BT	254	24V	2	600	855	3200-34444	70/18,4	83/21,9	133,5x80x105/52,5x31,4x41,3	127	279	1
37036-00013	Motion 60 BT	254	24V	2	600	855	3200-34444	70/18,4	83/21,9	133,5x80x105/52,5x31,4x41,3	129	284	1
37036-00014	Motion 60 BT	254	24V	2	600	855	3200-34444	70/18,4	83/21,9	133,5x80x105/52,5x31,4x41,3	185	407	1
37036-00003	Motion 70 BT	256	24V	2	700	965	3700-39826	70/18,4	83/21,9	133,5x80x105/52,5x31,4x41,3	130	286	1
37036-00016	Motion 70 BT	256	24V	2	700	965	3700-39826	70/18,4	83/21,9	133,5x80x105/52,5x31,4x41,3	132	291	1
37036-00017	Motion 70 BT	256	24V	2	700	965	3700-39826	70/18,4	83/21,9	133,5x80x105/52,5x31,4x41,3	134	295	1
37036-00018	Motion 70 BT	256	24V	2	700	965	3700-39826	70/18,4	83/21,9	133,5x80x105/52,5x31,4x41,3	190	418	1
37035-00001	Comfort XXS mini 55 BT	258	24V	1	550	650	3000-32291	70/18,4	75/19,81	73x129,5x131,5/160x285x289	128	282	1
37035-00027	Comfort XXS mini 55 BT	258	24V	1	550	650	3000-32291	70/18,4	75/19,81	73x129,5x131,5/160x285x289	131	288	1
37035-00003	Comfort XXS mini 55 BT	258	24V	1	550	650	3000-32291	70/18,4	75/19,81	73x129,5x131,5/160x285x289	200	440	1
37035-00002	Comfort XXS mini 60 BT	260	24V	2	600	650	3200-34444	70/18,4	75/19,81	73x129,5x131,5/160x285x289	133	293	1
37035-00028	Comfort XXS mini 60 BT	260	24V	2	600	650	3200-34444	70/18,4	75/19,81	73x129,5x131,5/160x285x289	136	299	1
37035-00005	Comfort XXS mini 60 BT	260	24V	2	600	650	3200-34444	70/18,4	75/19,81	73x129,5x131,5/160x285x289	205	451	1
37010-00052	Comfort XXS 66	262	24V	2	660	855	3250-34982	75/19,81	80/21,13	140x82x135/56x33x53	175	390	1
37010-00053	Comfort XXS 66	262	24V	2	660	855	3250-34982	75/19,81	80/21,13	140x82x135/56x33x53	247	544	1
37010-00060	Comfort XXS 66	262	24V	2	660	855	3250-34982	75/19,81	80/21,13	140x82x135/56x33x53	177	394	1
37010-00075	Comfort XXS 66 UP	264	24V	2	660	855	3250-34982	75/19,81	80/21,13	140x82x135/56x33x53	177	394	1
37010-00079	Comfort XXS 66 UP	264	24V	2	660	855	3250-34982	75/19,81	80/21,13	140x82x135/56x33x53	177	394	1
37006-00068	Comfort XS-R1 75 Essential	266	24V	2	750	900	4350-46823	110/29,06	130/34,34	152x97x154/59x39x61	217	478	1
37006-00070	Comfort XS-R1 85 Essential	266	24V	2	750	900	5000-53819	110/29,06	130/34,34	152x97x154/59x39x61	222	489	1
37006-00080	Comfort XS-R1 75 UP	268	24V	2	750	900	4350-46823	110/29,06	130/34,34	152x97x154/59x39x61	223	491	1
37006-00082	Comfort XS-R1 85 UP	268	24V	2	820	1000	5000-53819	110/29,06	130/34,34	152x97x154/59x39x61	229	504	1
37007-00025	Comfort S-R 100	270	36V	2	1000	1000	6800-73194	140/36,99	150/39,63	200x118x171/79x46x67	300	661	1
37007-00027	Comfort S-R 100 UP	270	36V	2	1000	1000	6800-73194	140/36,99	150/39,63	200x118x171/79x46x67	320	705	1
37009-00005	Comfort M102	272	36V	2	1020	1250	7140-76854	200/52,84	210/55,48	200x118x171/79x46x67	386	850	1
37005-00002	Comfort L122	274	36V	3	1220	1450	8540-91923	280/73,97	315/83,22	230x135x190/91x53x74	684	1507	1
37025-00004	Comfort Duotech 85 CS	280	24V	2	850	900	4250-45746	75/19,81	80/21,13	140x105x130/56x41x51	450	991	1
37025-00010	Comfort Duotech 85 CS RS	280	24V	2	850	900	4250-45746	75/19,81	80/21,13	140x105x130/56x41x51	450	991	1

Sprinter

MORE INFO

CHARACTERISTICS

• Suitable to work in high congested areas like small shops, offices, kitchens, schools, hospitals, bars, gyms, restaurants • Three controls for brush drive, washing and drying operations • Double floor squeegee for both forward and reverse drying • Sound pressure 68 dB (A) • Min. working height required 200 mm • Structure built with durable materials • Suitable load on the brush for an optimal cleaning efficiency • Detachable detergent/recovery tank • Cable holder • 7mt electric cable • Non-marking wheels.

TECHNICAL DATA

	Sprinter
code	37021-00002
power supply	230 V - 50 Hz
scrubbing/squeegee width	290/320 mm
max working capacity	1015 m^2/h
solution tank capacity	2.8 l/0.74 gal
recovery tank capacity	5.6 l/1.48 gal
traction	mechanical
RPM/pressure on the brush	1000/7 kg/15,43 lbs
brush motor power	200 W
noise level dB (A)	68
depression/vacuum motor	1428 mmH_2O/800 W
dimension (cm)/weight	37 x 37 x 113/13 kg

PLUS

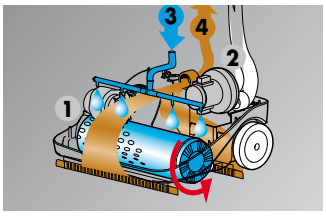

1) Brush motor
2) Vacuum motor
3) Detergent solution flow
4) Dirty liquid flow

Double squeegee for both forward and reverse washing and drying. PP brush suitable for most common floors (brush for carpet and moquette cleaning available cod. 10001-09817). ABS shock-proof covers. Non-marking rubber wheels.

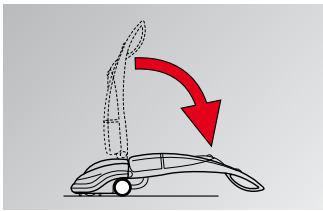

Minimun working height 200 mm, allowing perfect cleaning under furnitures, chairs, tables, beds, etc. The tilting handle makes easy and stressless the daily use of the machine.Large tank capacity avoiding frequent refilling of the unit

Cylindrical brush quick connection and release: the fitting and releasing of the brush does not require the use of tools. Ordinary cleaning and maintenance are simple and quick for anybody

STANDARD EQUIPMENT

• 10001-09810 PP brush Ø 100 mm	• 10001-09809 Squeegee kit	• 00054-01445 Stationary plate	• 00073-00036 4 x 100 ml concentrated detergent	

OPTIONAL

• 10001-09817 Carpet cleaning kit	• 00058-02618 Extension electric cord 15 m with Schuko plug			

LAVOR

Crystal clean

MORE INFO

CHARACTERISTICS

• Suitable to work in high congested areas like small shops, offices, kitchens, schools, hospitals, bars, gyms, restaurants • Max 90°C hot scrubbing • Three controls for brush drive, washing and drying operations • Double floor squeegee for both forward and reverse drying • Sound pressure 68 dB (A) • Min. working height required 200 mm • Structure built with durable materials • Suitable load on the brush for an optimal cleaning efficiency • Detachable detergent/recovery tank • Cable holder • 10 mt electric cable • Non-marking wheels.

TECHNICAL DATA

	Crystal Clean
code	37021-00004
power supply	230 V - 50 Hz
scrubbing/squeegee width	290/320 mm
max working capacity	1015 m²/h
solution tank capacity	2.8 l/0.74 gal
recovery tank capacity	5.6 l/1.48 gal
traction	mechanical
RPM/pressure on the brush	1000/7 kg/15,43 lbs
brush motor power	200 W
noise level dB (A)	68
depression/vacuum motor	1428 mmH_2O/800 W
dimension (cm)/weight	37 x 37 x 113/14 kg

PLUS

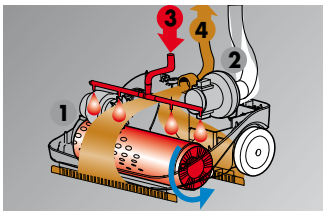

1) Brush motor
2) Vacuum motor
3) Hot water with detergent solution flow
4) Dirty liquid flow

Double squeegee for both forward and reverse washing and drying. PP brush suitable for most common floors and soft brush for carpet and moquette cleaning.

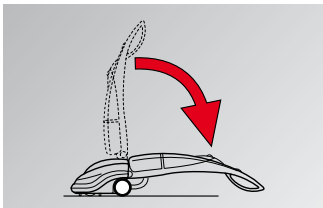

Minimun working height 200 mm, allowing perfect cleaning under furnitures, chairs, tables, beds, etc. The tilting handle makes easy and stressless the daily use of the machine. Large tank capacity avoiding frequent refilling of the unit

Hot water cleaning for a faster and perfect removal of the most common organic dirt (grease, mud, oil, etc.)

STANDARD EQUIPMENT

• 10001-09810 PP brush Ø 100 mm	• 10002-06673 Soft brush Ø 100 mm	• 10001-09809 Squeegee kit	• 00054-01445 Stationary plate	• 00073-00036 4 x 100 ml concentrated detergent

OPTIONAL

• 10001-09817 Carpet cleaning kit	• 00058-02618 Extension electric cord 15 m with Schuko plug			

Fit

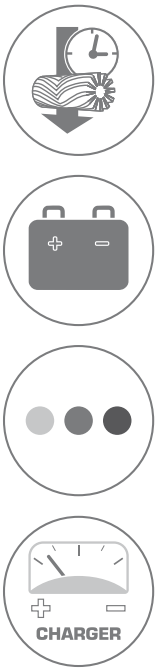

MORE INFO

CHARACTERISTICS

• Compact design for easy operation • Cordless design with Lithium-ion battery • Height adjustment handle • Foldable design for easy storage • High speed rolling brush • Detachable water tanks • LED lights at front and switches • Easy maintenance for scrubblers and brush • Suitable for many commercial and household occasions

TECHNICAL DATA

	Fit 35B Li
code	37024-00001
power supply	Lithium-ion battery type 25,2V/6400mAh
scrubbing/squeegee width	350/422 mm
max working capacity	1500 m²/h
solution tank capacity	1,9 l/0.50 gal
recovery tank capacity	1,50 l/0.39 gal
traction	Mechanical
RPM	350
brush motor power	32 W
noise level dB (A)	<70
suction/vacuum motor	500 mmH_2O/ 70 W
dimension (cm)/weight	44,7x42,2x115,9/11,3 Kg

PLUS

Mini floor-scrubber dryer for daily cleaning, designed for the Ho.re.ca sector and cleaning companies. Washes and dries quickly saving time and effort. Lithium-ion technology: always ready to use, fast charge, maximum power.

Agile, compact and versatile: easy cleaning in the tightest areas, suitable for the cleaning of all types of "hard" floors. Ergonomic handle. Height-adjustable handle. Professional brushes to clean the most stubborn dirt.

Joint that allows to maneuver the mini floor scrubber dryer with extreme simplicity. LED headlamp. Removable detergent solution tank. Removable dirt water tank easy to empty.

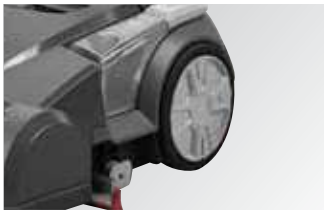

Pratical on/off foot switch. Drying: the squeegee ensures the floor instant drying.

STANDARD EQUIPMENT

• 00080-04154 PP Brush	• 00005-02201 Front squeegee blade • 00005-02202 Rear squeegee blade	• 00056-00081 Battery charger UE plug	• 00055-00082 LI-ION battery	

OPTIONAL

• 00056-00082 - UK plug market battery charger • 00056-00083 - USA plug market battery charger				

Set

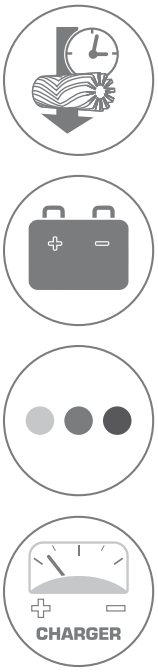

MORE INFO

CHARACTERISTICS

• Long battery life: up to 90 minutes (ECO mode) • Cleaning efficiency: up to 1200 m²/h • Extra-large water tanks: 5L (solution) + 8L (recovery) • Ultra-lightweight design: 20 kg (empty tanks) • High-speed dual brushes: 380 rpm • Effortless and labor-saving: +50% improved efficiency • Faster and deeper cleaning • Quick brush and squeegee replacement without tools • Ready to use: lithium battery and standard charger included

TECHNICAL DATA

	Set 43B Li
code	37038-00001
power supply	Lithium-ion battery type 25,6V/15,5Ah
scrubbing/squeegee width	430/450 mm
max working capacity	1200 m²/h
solution tank capacity	5 l/1.3 gal
recovery tank capacity	8 l/2.1 gal
traction	Mechanical
RPM	380
brush motor power	120 W
noise level dB (A)	<70
suction/vacuum motor	600 mmH_2O/400 W
dimension (cm)/weight	45x39x119/20 Kg

PLUS

Long battery life: up to 90 minutes (ECO mode), cleaning efficiency: up to 1200 m²/h

Extra-large water tanks: 5L (solution) + 8L (recovery), ultra-lightweight design: 20 kg (empty tanks)

High-speed dual brushes
Ø 234: 380 rpm

Ready to use: lithium battery and standard charger included

STANDARD EQUIPMENT

• 00080-05364 2x PP Brush	• 00071-06234 Kit front and rear squeegee blade	• 00055-00185 LI-ION battery	• 00056-00118 Battery charger UE plug	

OPTIONAL

• 00058-03877 Battery charging cable adapter	• 00026-02327 Set of driving discs Ø 234 (2pcs)	• 10001-14063 Set red pad Ø 234 (2pcs)		

Ready

MORE INFO

CHARACTERISTICS

• Ready: washes, sweeps and dries in both working directions. • High cleaning performance thanks to the dual contra-rotating cylindrical brushes.• Key features: sweeping action, bi-directional drying, multi-surface capabilities (including carpets and rugs). •"Start-stop" safety handle. • Lightweight (only 15Kg) and easy to handle, cleaning the floor has never been less tiring. • Maintenance and lubrication free • Low running noise <70 dB

TECHNICAL DATA

	Ready 32B Li
code	47001-00001
power supply	36V (battery and charger included)
scrubbing/squeegee width	320/340 mm
max working capacity	1500 m²/h
solution tank capacity	3,5 l/0.92 gal
recovery tank capacity	6,0 l/1.59 gal
traction	mechanical
RPM/pressure on the brush	650/17 kg/37.50 lbs
brush motor power	200 W
noise level dB (A)	<70
depression/vacuum motor	1000 mmH_2O/100 W
dimension(cm)/weight	49x41x112/15 Kg

PLUS

Dual contra-rotating cylindrical brushes offer up to 40% more cleaning performance in a single pass, significantly increasing productivity. The machine features a safety handle for switching it on and off instantaneously.

Sweeping function thanks to the dual contra-rotating cylindrical brushes, combined with a special "mechanical" recovery system, Ready washes, sweeps and dries at the same time.

it is suited for wood, cotto, ceramic floor tiles, stone, marble, textured flooring, bolted rubber flooring, carpet tiles and carpets with ease.

The perfect balance: the centrally mounted motor and tank ensure a perfect balance, the essential prerequisite for light weight and good handling in all conditions. Completely protected components: the only fully sealed machine: no water, dust or residue of any kind can get into it.

STANDARD EQUIPMENT

• 2 x 00080-04085 Grey Brush (universal, all-purpose for all types of flooring)	• 10001-07783 Kit squeegee dual - assembled	• 10001-07784 Kit squeegee mono – not assembled	• 00055-00100 LI-ION battery	• 00056-00010 Battery Charger (V 110/115/240 50-60 Hz)

OPTIONAL

• 2 x 00080-04086 Black Brush (hard, all-purpose for hard floor, moquettes)	• 00056-00011 Fast charger			

Quick

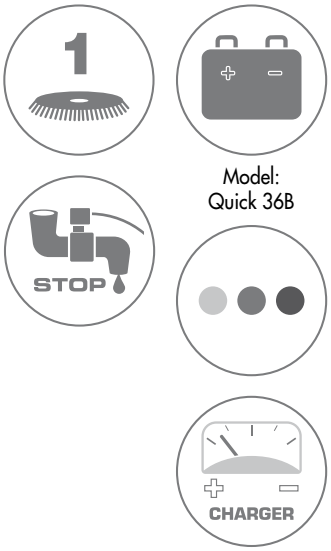

Model:
Quick 36B

Model:
Quick 36B

MORE INFO

CHARACTERISTICS

• Suitable to work in high congested areas like small shops, offices, kitchens, schools, hospitals, bars, gyms, restaurants • Adjustable flow (automatic start-stop with solenoid valve) of the detergent solution depending on type of surface • Brush with quick release • Removable recovery tank • Available in battery version (36B) with integrated battery charger with data memory and for any type of batteries • Battery included (36 B) • Squeegee lifting lever • Compact reclining handle with control switches • Easy access and simple service of the components.

TECHNICAL DATA

	Quick 36E	Quick 36B
code	37004-00004	37004-00003
power supply	220-240 V - 50-60 Hz	12 V (batteries and charger included)
scrubbing/squeegee width	360/460 mm	360/460 mm
max working capacity	1260 m^2/h	1260 m^2/h
solution tank capacity	11 l/2.91 gal	11 l/2.91 gal
recovery tank capacity	12-13 l/3.2 gal	12-13 l/3.2 gal
traction	mechanical	mechanical
RPM/pressure on the brush	130/25 kg/55 lbs	145/22 kg/48,5 lbs
brush motor power	370 W	250 W
detergent solution system	solenoid valve	solenoid valve
depression/vacuum motor	850 mmH_2O/400 W	650 mmH_2O/180 W
dimension (cm)/weight	120x43x97/49kg	120x43x97/57kg

PLUS

Reclining handle: fit on any operator's height and allowing the perfect cleaning also on 90° corners. Shock-absorbing covers, simple cleaning of the recovery tank, non marking wheels.

Easy access to mechanical parts (easy maintenance of each component), removable recovery tank without tools.

User friendly analogic control panel. Control lever for brush operation and detergent water outflow.
General ON/OFF switch, brush and vacuum motor switch, solenoid valve operation switch.

Parabolic squeegee, easy rubber blades replacement.
The floating brush plate and squeegee grant the right cleaning pressure on any type of floor.

STANDARD EQUIPMENT

• 10002-08103 PP brush Ø 360 mm - 14"	• 00005-02530 Front squeegee blade L.537 mm - Th. 1,5 mm • 00005-02529 Rear squeegee blade L.590 mm - Th. 3,0 mm	• 1x 00055-00179 battery AGM-GEL 12V 76Ah C20 only for model code: 37004-00003	• 00056-00054 On-board Battery charger 12V 8A only for model code: 37004-00003	• 00058-00723 Power cable 1,5 mt. for battery charger only for model code: 37004-00003

OPTIONAL

• 00055-00147 battery GEL 12V 65Ah C20/50Ah C5 only for model code: 37004-00003	• 00056-00046 Booster battery charger	• 00005-02257 Polyurethane front blade L.537 TH. 2 • 00005-02258 Polyurethane rear blade L.590 TH. 2,5	• 10002-08104 Tynex brush Ø 360 mm-14" • 10002-08105 PP 0,3 brush Ø 360 mm-14" • 10002-08106 PES brush Ø 360 mm-14"	• 10002-08107 EWU pad driver Ø 360mm-14"
• 10001-09944 Abrasive pad Ø 381 mm-15" - beige (5 pcs.) • 10001-09945 Abrasive pad Ø 381 mm-15" - green (5 pcs.) • 10001-09942 Abrasive pad Ø 381 mm-15" - black (5 pcs.)	• 00058-02618 Extension electric cord 15 m with Schuko plug (optional on model 37004-00004)			

Dart

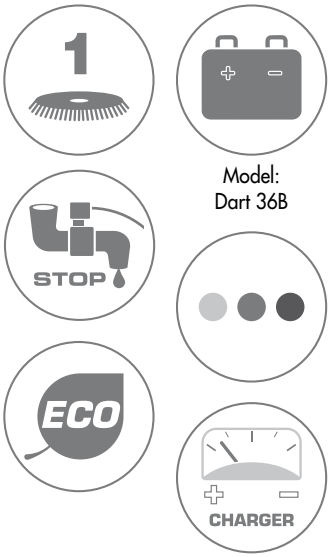

Model:
Dart 36B

Model:
Dart 36B

MORE INFO

CHARACTERISTICS

• Ideal for small and medium floors up to 1260 sqm, especially when congested by people or furnishing like in wellness centres, gyms, car showroom, retail shops, hospitals and schools. • Automatic brush attachment, discharge and delayed cut-off. • Narrow body with both side brush protrusion and 300° squeegee spin. • Toolless removable recovery tank with large visual inspection window and stretchable discharge hose. • Adjustable driving handle with dead man switches, soft touch controls and diagnosis (Eco Energy mode and battery low level automatic cut-off for DC version). • Clean water tank level indicator • Large non marking working wheels and sturdy rear roller for displacements.

TECHNICAL DATA

	Dart 36E	Dart 36B	Dart 36B
code	37012-00031	37012-00032	37012-00033
power supply	220-240 V 50-60Hz	24V (battery charger included)	24V (batteries and charger included)
scrubbing/squeegee width	360/460 mm	360/460 mm	360/460 mm
max working capacity	1260 m^2/h	1260 m^2/h	1260 m^2/h
solution tank capacity	15 l/3.96 gal	15 l/3.96 gal	15 l/3.96 gal
recovery tank capacity	16 l/4.23 gal	16 l/4.23 gal	16 l/4.23 gal
traction	mechanical	mechanical	mechanical
RPM/pressure on the brush	130/18 kg/40 lbs	160/27 kg/60 lbs	160/27 kg/60 lbs
brush motor power	300 W	400 W	400 W
detergent solution system	solenoid valve	solenoid valve	solenoid valve
depression/vacuum motor	850 mmH_2O/350 W	850 mmH_2O/270 W	850 mmH_2O/270 W
dimension (cm)/weight	98x47x99/57 kg	98x47x99/46 kg	98x47x99/70 kg

PLUS

On/off switch protecting unintentional use. Protection against overloads, battery discharge abuse (DC only) and undesired run. Convenient one switch maintenance over the brush. Eco Energy setting for extensive working time and extremely quite operations (DC only).

Extensive squeegee spin for easy blade replacement and perfect suction even on corners. Easy setting and automatic solution release to save chemical and fit different floor conditions. High stability and capability to overtake small steps.

Easy access and handling to clean recovery tank and floater. Less downtimes due to simple maintenance and construction. Great visibility and cleaning capability on hard to reach edges on both sides of the brush.

Parabolic squeegee, easy rubber blades replacement.
The floating brush plate and squeegee grant the right cleaning pressure on any type of floor.

STANDARD EQUIPMENT

• 10002-08145 PP brush Ø 380 mm - 15" (38 B Li) • 10002-13271 PP brush Ø 360 mm - 14" (36 B- 36 E)	• 00005-02530 Front squeegee blade L.537 mm - Th. 1,5 mm • 00005-02529 Rear squeegee blade L.590 mm - Th. 3,0 mm	• 00056-00064 On-board Battery charger 24V-5A only for model code: 37012-00032 37012-00033	• 2x 00055-00098 battery AGM-GEL 12V 35Ah C20 / 29 Ah C 5 (only for model code: 37012-00033)	

OPTIONAL

• 2x 00055-00098 battery AGM-GEL 12V 35Ah C20 / 29 Ah C 5 (only for model code: 37012-00033)	• 00005-02257 Polyurethane front blade L.537 TH. 2 • 00005-02258 Polyurethane rear blade L.590 TH. 2,5	• 10002-08104 Tynex brush Ø 360 mm-14" • 10002-08105 PP 0,3 brush Ø 360 mm-14" • 10002-08106 PES brush Ø 360 mm-14"	• 10002-08146 Tynex brush Ø 380 mm-15" • 10002-08147 PP 0,3 brush Ø 380 mm-15" • 10002-08148 PES brush Ø 380 mm - 15"	• 10002-08107 EWU pad driver Ø 360mm-14"
• 10001-09944 Abrasive pad Ø 381 mm-15" - beige (5 pcs.) • 10001-09945 Abrasive pad Ø 381 mm-15" - green (5 pcs.) • 10001-09942 Abrasive pad Ø 381 mm-15" - black (5 pcs.)	• 00058-02618 Extension electric cord 15 m with Schuko plug (optional on model 37012-00031)			

Dynamic

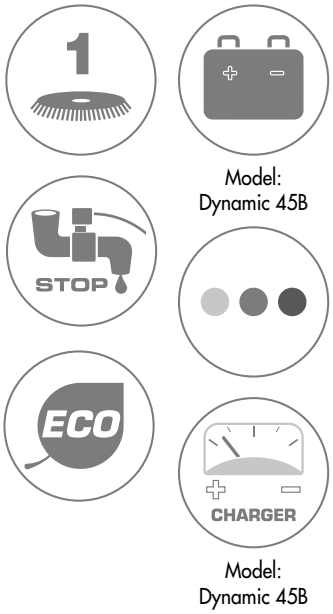

Model:
Dynamic 45B

Model:
Dynamic 45B

MORE INFO

CHARACTERISTICS

• Ideal for small and medium floors up to 1600sqm, especially when congested by people or furnishing like in wellness centres, gyms, car showroom, retail shops, hospitals and schools. • Automatic brush attachment, discharge and delayed cut-off. • Adjustable solution release with automatic cut-off. • Narrow body with both side brush protrusion and 300° squeegee spin. • Toolless removable recovery tank with large visual inspection window and stretchable discharge hose. • Adjustable driving handle with dead man switches, soft touch controls and diagnosis (Eco Energy mode and battery low level automatic cut-off for DC version). • Large non marking working wheels and sturdy rear roller for displacements.

TECHNICAL DATA

	Dynamic 45E	Dynamic 45B	Dynamic 45B
code	37011-00051	37011-00052	37011-00053
power supply	230V-50Hz	24V (battery charger included)	24V (batteries and charger included)
scrubbing/squeegee width	450/540 mm	450/540 mm	450/540 mm
max working capacity	1600 m^2/h	1600 m^2/h	1600 m^2/h
solution tank capacity	30 l/7.92 gal	30 l/7.92 gal	30 l/7.92 gal
recovery tank capacity	32-35 l/8.45 - 9.24 gal	32-35 l/8.45 - 9.24 gal	32-35 l/8.45 - 9.24 gal
traction	mechanical	mechanical	mechanical
RPM/pressure on the brush	145/32 kg/70,5 lbs	145/32 kg/70,5 lbs	145/32 kg/70,5 lbs
brush motor power	300 W	400 W	400 W
detergent solution system	solenoid valve	solenoid valve	solenoid valve
depression/vacuum motor	1200 mmH_2O/700 W	1200 mmH_2O/400 W	1200 mmH_2O/400 W
dimension (cm)/weight	117x58x99/66 kg	117x58x99/53 kg	117x58x99/94 kg

PLUS

On/off switch protecting unintentional use. Protection against overloads, battery discharge abuse (DC only) and undesired run. Convenient one switch maintenance over the brush. Eco Energy setting for extensive working time and extremely quite operations (DC only).

Accessible on-board charger (DC only, when provided), far away from sprays. Time saving convenient foot operating squeegee lift. Handle can be easily adjusted to fit comfort of operators even in narrow spaces.

Easy access and handling to clean recovery tank and floater. Less downtimes due to simple maintenance and construction. Great visibility and cleaning capability on hard to reach edges on both sides of the brush.

Parabolic squeegee, easy rubber blades replacement.
The floating brush plate and squeegee grant the right cleaning pressure on any type of floor.

STANDARD EQUIPMENT

• 10002-08117 PP brush Ø 430 mm - 17"	• 00005-02276 Front squeegee blade Shore 40 Th. 2,5 mm • 00005-02277 Rear squeegee blade Shore 40 Th. 3,0 mm	• 00056-00062 On-board Battery charger 24V 10A (only for model code: 37011-00052/37011-00053)	• 2 x 00055-00179 battery AGM-GEL 12V 76Ah C20 only for model code: 37011-00053	

OPTIONAL

• 2 x 00055-00147 battery GEL 12V 65Ah C20/50Ah C5 only for model code: 37011-00053	• 00005-02278 Polyurethane front blade L.665 • 00005-02279 Polyurethane rear blade L.775	• 10002-08118 Tynex brush Ø 430 mm-17" • 10002-08119 PP 0,3 brush Ø 430 mm-17″ • 10002-08120 PES brush Ø 430 mm - 17″	• 10002-13151 EWU pad driver Ø 430 mm-17"	• 10001-09913 Abrasive pad Ø 430 mm-17" - beige (5 pcs.) • 10001-09918 Abrasive pad Ø 430 mm-17″ - green (5 pcs.) • 10001-09923 Abrasive pad Ø 430 mm-17″ - black (5 pcs.)
• 00058-02618 Extension electric cord 15 m with Schuko plug (optional on model 37011-00051)	• 00055-00166 Li-ion battery LiFePO4 50 Ah	• 00056-00093 Battery charger CBH2D 24V 20A		

Free Evo

Model:
Free 50B

Model:
Free 50B

MORE INFO

CHARACTERISTICS

• Very compact scrubbing machines suitable to work for the maintenance cleaning of limited-size areas (up to 1.500 m²) • Especially suitable for cleaning: car shops, sales points, gym, health care • Control panel with operator presence safety system • Low level battery indicator: brush/vacuum and traction progressive cut off (Battery models) • Solution water filter and solenoid valve • Easy access to the battery compartment • Quick drain and easily inspectable recovery tank • Non-marking wheels • Roto-molded polyethylene tanks, shock and acid resistant • The lower tank also serves as battery compartment • Low noise operation thanks to the protected positioning of vacuum motor.

Other available versions:
• 37031-00013 - Free Evo 50B with batteries and battery charger
• 37031-00016 - Free Evo 50BT with batteries and battery charger

TECHNICAL DATA

	Free Evo 50E	Free Evo 50B	Free Evo 50B	Free Evo 50BT	Free Evo 50BT
code	37031-00003	37031-00104	37031-00001	37031-00105	37031-00002
power supply	230 V - 50 Hz	24V	24V (battery charger included)	24V	24V (battery charger included)
scrubbing/squeegee width	500/800 mm	500/800 mm	500/800 mm	500/800 mm	500/800 mm
max working capacity	2000 m²/h	2000 m²/h	2000 m²/h	2000 m²/h	2000 m²/h
solution tank capacity	44 l/11,63 gal	44 l/11,63 gal	44 l/11,63 gal	44 l/11,63 gal	44 l/11,63 gal
recovery tank capacity	50-60 l/13,21-16 gal	50-60 l/13,21-16 gal	50-60 l/13,21-16 gal	50-60 l/13,21-16 gal	50-60 l/13,21-16 gal
traction/traction motor	mechanical	mechanical	mechanical	automatic/150W	automatic/150W
RPM/pressure on the brush	145/20 kg/44 lbs	145/20 kg/44 lbs	145/20 kg/44 lbs	145/20 kg/44 lbs	145/20 kg/44 lbs
brush motor power	550W	550W	550W	550W	550W
detergent solution system	solenoid valve	solenoid valve	solenoid valve	solenoid valve	solenoid valve
depression/vacuum motor	1700 mmH_2O/800W	1280 mmH_2O/400W	1280 mmH_2O/400W	1280 mmH_2O/400W	1280 mmH_2O/400W
dimension (cm)/weight	116x46x98/95 kg	116x51x98/62 kg	116x51x98/63 kg	116x51x98/66 kg	116x51x98/67 kg

PLUS

Powerful gearmotor; metal brush plate with integrated plastic splash guard/bumper.

The outflow of the detergent solution is controlled by a solenoid valve. The actuation of the solenoid valve is operated by the control lever, avoiding the detergent solution outflow when the brush is stopped during the interruptions of work.

Renovated squeegee with new pressure adjusting system. Quick and easy squeegee coupling through the two large knobs; the squeegee is released without any damage in the event of accidental impact.

Easy and intuitive controls. The outflow of the cleaning solution is easily controlled using the mechanical lever placed on the control panel. Inspectable mesh filter to trap any existing solid body in the cleaning solution.

STANDARD EQUIPMENT

• 10002-08127 PP brush Ø 483 mm - 19"	• 00005-02298 Front squeegee blade L.830 mm Shore 40 Th. 2.5 mm • 00005-02297 Rear squeegee blade L.870 mm Shore 40 Th. 3 mm	• 00056-00038 On-board Battery charger 24V 10A only for model code: 37031-00001/37031-00002 37031-00013/37031-00016	• 2 x 00055-00183 battery AGM GEL 12V 88Ah C5 only for model code: 37031-00013/37031-00016	

OPTIONAL

• 2 x 00055-00149 Tubular battery Pb-acid 12V 118Ah C5	• 2 x 00055-00130 GEL Battery 12 MFP 105 12V 105Ah C5	• 00005-02268 Polyurethane front blade L.830 TH. 3 • 00005-02267 Polyurethane rear blade L.870 TH. 4	• 10002-08128 Tynex brush Ø 483 mm-19" • 10002-08129 PP 0,3 brush Ø 483 mm-19" • 10002-08130 PES brush Ø 483 mm - 19"	• 10002-08131 EWU pad driver Ø 483 mm-19"
• 10001-09914 Abrasive pad Ø 483 mm-19" - beige (5 pcs.) • 10001-09919 Abrasive pad Ø 483 mm-19" - green (5 pcs.) • 10001-09924 Abrasive pad Ø 483 mm-19" - black (5 pcs.)	• 00058-02618 Extension electric cord 15 m with Schuko plug (optional on model 37031-00003)			

Moving 55E/55B

MORE INFO

CHARACTERISTICS

• Very compact floor scrubber dryer suitable to work for the maintenance cleaning of limited-size areas • Ideal for cleaning car shops, sales points, gym, health care • Control panel with operator presence safety system • Low level battery indicator with brush/vacuum and traction progressive cut off (Battery models) • Solution water filter and solenoid valve • Easy access to the battery compartment • Quick drain and easily inspectable recovery tank • Non-marking wheels • Roto-molded polyethylene tanks, shock and acid resistant • Shock and acid resistant • The lower tank is also battery compartment • Low noise operation thanks to the protected positioning of vacuum motor. • Possibility to mount Li-ion batteries • Accessory storage facility on request • Chemical dispenser tank (optional) • New fulcrum and new lever for squeegee adjustment • New detergent solution adjustment level • New control panel with electrical board with Fleet Managemet System (available on request) • Solution tank easy to refill thanks to the special hose supplied as standard which can be connected directly to the water supply

TECHNICAL DATA

	Moving 55E	Moving 55B	Moving 55B	Moving 55B
code	37033-00002	37033-00003	37033-00004	37033-00005
power supply	230 V - 50 Hz	24 V	24 V (battery charger included)	24 V (battery and charger included)
scrubbing/squeegee width	550/800 mm	550/800 mm	550/800 mm	550/800 mm
max working capacity	2200 m^2/h	2200 m^2/h	2200 m^2/h	2200 m^2/h
solution tank capacity	55 l/14,5 gal	55 l/14,5 gal	55 l/14,5 gal	55 l/14,5 gal
recovery tank capacity	60 l/16 gal	60 l/16 gal	60 l/16 gal	60 l/16 gal
traction/traction motor	mechanical	mechanical	mechanical	mechanical
RPM/pressure on the brush	165/22 kg/48 lbs	150/22 kg/48 lbs	150/22 kg/48 lbs	150/22 kg/48 lbs
brush motor power	550W	550W	550W	550W
detergent solution system	solenoid valve	solenoid valve	solenoid valve	solenoid valve
depression/vacuum motor	1700 mmH_2O/800W	1280 mmH_2O/400W	1280 mmH_2O/400W	1280 mmH_2O/400W
dimension (cm)/weight	127x65x102/97 kg	127x65x102/74 kg	127x65x102/75 kg	127x65x102/130 kg

PLUS

Large and easily inspectable roto-molded polyethylene tank, shock and acid resistant

Solution tank level indicator

Electromechanical sensor for dirty water level signaling

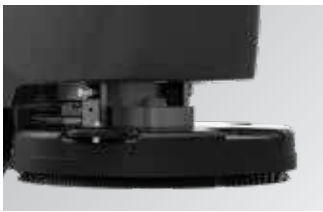

Sturdy aluminium brush plate with brush coupling and release

STANDARD EQUIPMENT

• 10002-14574 PP brush Ø 533 mm - 21"	• 00005-02282 Rear squeegee blade L.900 mm Shore 40 Th. 3 mm • 00005-02283 Front squeegee blade L.860 mm Shore 33 Th. 2 mm	• 00056-00062 On-board Battery charger 24V 10A only for model code: 37033-00004/37033-00005)	• 2 x 00055-00183 battery AGM GEL 12V 88Ah C5 only for model code: 37033-00005	• Refill hose (on request)

OPTIONAL

• 2 x 00055-00149 Tubular battery Pb-acid 12V 118Ah C5	• 2 x 00055-00130 GEL Battery 12 MFP 105 12V 105Ah C5	• 00005-02284 Polyurethane rear blade L.900 TH. 3 • 00005-02285 Polyurethane front blade L.860 TH. 2	• 10002-14572 Tynex brush Ø 533 mm-21" • 10002-14571 PP 03 brush Ø 533 mm-21" • 10002-14573 PES brush Ø 533 mm-21"	• 10002-14570 EWU pad driver Ø 505 mm-20"
• Float filling system with acquastop on request (on request)	• 10001-12852 accessory hook kit	(kit 5 pcs) • 10001-09915 - Ø 533 mm-21"- beige • 10001-09920 - Ø 533 mm-21"- green • 10001-09925 - Ø 533 mm-21"- black	• 00058-02618 15m extension cable with Schuko socket	

Moving 55BT

MORE INFO

CHARACTERISTICS

• Very compact floor scrubber dryer suitable to work for the maintenance cleaning of limited-size areas • Ideal for cleaning car shops, sales points, gym, health care • Control panel with operator presence safety system • Low level battery indicator with brush/vacuum and traction progressive cut off • Solution water filter and solenoid valve • Easy access to the battery compartment • Quick drain and easily inspectable recovery tank • Non-marking wheels • Roto-molded polyethylene tanks, shock and acid resistant • Shock and acid resistant • The lower tank is also battery compartment • Low noise operation thanks to the protected positioning of vacuum motor. • Separate chemist. • Possibility to mount Li-ion batteries • Accessory storage facility on request • Detergent dosing kit 1,5 l only code 37033-00008 • New fulcrum and new lever for squeegee adjustment • New detergent solution adjustment level • New control panel with electrical board with Fleet Managemet System (available on request) • Sturdy aluminium brush plate with brush coupling and release • Solution tank easy to refill thanks to the special hose supplied as standard which can be connected directly to the water supply

TECHNICAL DATA

	Moving 55BT	Moving 55BT	Moving 55BT	Moving 55BT
code	37033-00001	37033-00006	37033-00007	37033-00008
power supply	24 V	24 V (battery charger included)	24 V (battery and charger included)	24 V (battery and charger included)
scrubbing/squeegee width	550/800 mm	550/800 mm	550/800 mm	550/800 mm
max working capacity	2400 m²/h	2400 m²/h	2400 m²/h	2400 m²/h
solution tank capacity	55 l/14,5 gal	55 l/14,5 gal	55 l/14,5 gal	55 l/14,5 gal
recovery tank capacity	60 l/16 gal	60 l/16 gal	60 l/16 gal	60 l/16 gal
traction/traction motor	automatic/180W	automatic/180W	automatic/180W	automatic/180W
RPM/pressure on the brush	150/22 kg/48 lbs	150/22 kg/48 lbs	150/22 kg/48 lbs	150/22 kg/48 lbs
brush motor power	550W	550W	550W	550W
detergent solution system	solenoid valve	solenoid valve	solenoid valve	solenoid valve + dosing kit
depression/vacuum motor	1280 mmH_2O/400W	1280 mmH_2O/400W	1280 mmH_2O/400W	1280 mmH_2O/400W
dimension (cm)/weight	127x65x102/83 kg	127x65x102/84 kg	127x65x102/139 kg	127x65x102/139 kg

PLUS

Front-wheel drive equipped with reverse

Large and easily inspectable roto-molded polyethylene tank, shock and acid resistant

Solution tank level indicator

Chemical dispenser tank (optional) Standard on the model code 37033-00008 Moving 55BT

STANDARD EQUIPMENT

• 10002-14574 PP brush Ø 533 mm - 21"	• 00005-02282 Rear squeegee blade L.900 mm Shore 40 Th. 3 mm • 00005-02283 Front squeegee blade L.860 mm Shore 33 Th. 2 mm	• 00056-00062 On-board Battery charger 24V 10A only for model code: 37033-00006/37033-00007/37033-00008)	• 2 x 00055-00183 battery AGM GEL 12V 88Ah C5 only for model code: 37033-00007/37033-00008	• Refill hose (on request)

OPTIONAL

• 2 x 00055-00149 Tubular battery Pb-acid 12V 118Ah C5	• 2 x 00055-00130 GEL Battery 12 MFP 105 12V 105Ah C5	• 00005-02284 Polyurethane rear blade L.900 TH. 3 • 00005-02285 Polyurethane front blade L.860 TH. 2	• 10002-14572 Tynex brush Ø 533 mm-21" • 10002-14571 PP 03 brush Ø 533 mm-21" • 10002-14573 PES brush Ø 533 mm-21"	• 10002-14570 EWU pad driver Ø 505 mm-20"
• Float filling system with acquastop on request (on request)	• 10001-12852 accessory hook kit	(kit 5 pcs) • 10001-09915 - Ø 533 mm-21"- beige • 10001-09920 - Ø 533 mm-21"- green • 10001-09925 - Ø 533 mm-21"- black		

Motion 60BT

MORE INFO

CHARACTERISTICS

• Especially suitable for thorough cleaning of medium and large surfaces • Control panel with operator presence safety system • Low level battery indicator with brush/vacuum and traction progressive cut off • Solution water filter and solenoid valve • Easy access to the battery compartment • Quick drain and easily inspectable recovery tank • Non-marking wheels • Shock and acid resistant roto-molded polyethylene tanks • The lower tank is also battery compartment • Low noise operation thanks to the protected positioning of vacuum motor • Separate chemist (optional) • Possibility to mount Li-ion batteries • Accessory storage facility on request • **Automatic lifting of the brush plate with interchangeable brush head • Adjustable brush pressure till 40 kg (continuous duty)** • FMS (Fleet Management System) available on request

Available also full optional version: gel batteries, battery charger, detergent dosing kit, water stop system and hook kit MOTION 60 BT code 37036-00015

TECHNICAL DATA

	Motion 60BT	Motion 60BT	Motion 60BT	Motion 60BT
code	37036-00002	37036-00004	37036-00013	37036-00014
power supply	24 V	24 V (battery charger included)	24 V (battery charger included)	24 V (battery and charger included)
scrubbing/squeegee width	600/855 mm	600/855 mm	600/855 mm	600/855 mm
max working capacity	3200 m^2/h	3200 m^2/h	3200 m^2/h	3200 m^2/h
solution tank capacity	70 l/18.4 gal	70 l/18.4 gal	70 l/18.4 gal	70 l/18.4 gal
recovery tank capacity	83 l/21.9 gal	83 l/21.9 gal	83 l/21.9 gal	83 l/21.9 gal
traction	automatic/180W	automatic/180W	automatic/180W	automatic/180W
RPM/pressure on the brushes	150/40 kg / 88 lbs	150/40 kg / 88 lbs	150/40 kg / 88 lbs	150/40 kg / 88 lbs
brush motor power	2x400W	2x400W	2x400W	2x400W
detergent solution system	solenoid valve	solenoid valve	solenoid valve + dosing kit	solenoid valve
depression/vacuum motor	1200 mmH_2O/400W	1200 mmH_2O/400W	1200 mmH_2O/400W	1200 mmH_2O/400W
dimension (cm)/weight	134x81x116/125 kg	134x81x116/127 kg	134x81x116/129 kg	134x81x116/185 kg

PLUS

Interchangeable heads with orbital function and roller brush

Large and easily inspectable roto-molded polyethylene tank, shock and acid resistant

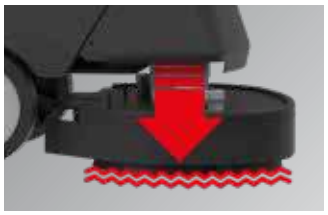

Equipped with an actuator for automatic brush plate activation and adjustable brush pressure continue 40Kg/88 lbs

Chemical dispenser tank (optional) standard on model code: 37036-00013 and 37036-00015 Motion 60BT

STANDARD EQUIPMENT

• 2 x 10002-16258 PP brush Ø 305 mm - 12″	• 00005-02293 Front squeegee blade L.960X57mm Th. 2,5mm • 00005-02292 Rear squeegee blade L.1000X57mm Th.3mm	• 1 x 00056-00062 On-board Battery charger 24V 10A 100-240V 50-60Hz Only model cod. 37036-00004/37036-00013/ 37036-00014/37036-00015	• 2 x 00055-00130 Gel Battery 12V 105A/C5-120A/C20 Only model cod. 37036-00014/37036-00015	• 00014-01349 Refill hose 1,7m

OPTIONAL

• 2 x 00055-00149 Tubular battery Pb-acid 12V 118Ah C5	• 2 x 00055-00130 Gel Battery 12V 105A/C5-120A/C20	• 2 x 00055-00181 Cyclic AGM battery 12V 136Ah C5-150Ah C2	• 00005-02633 Polyurethane front blade L.960 TH.2,5 Sh.40 • 00005-02632 Polyurethane rear blade L.1000 TH.3 Sh.40	• 2 x 10002-16259 Tynex brush Ø 305 mm-12″ • 2 x 10002-16260 PP brush 03 Ø 305 mm-12″ • 2 x 10002-16261 PES brush Ø 305 mm-12″
• 2 x 10002-16262 x2 EWU pad driver Ø 305 mm - 12″	(kit 5 pz) • 10001-14034 - Ø 305 mm-12″- beige • 10001-14035 - Ø 305 mm-12″- green • 10001-13262 - Ø 305 mm-12″- black	• 10001-12852 accessory hook kit		

Motion 70BT

MORE INFO

CHARACTERISTICS

• Especially suitable for thorough cleaning of medium and large surfaces • Control panel with operator presence safety system • Low level battery indicator with brush/vacuum and traction progressive cut off • Solution water filter and solenoid valve • Easy access to the battery compartment • Quick drain and easily inspectable recovery tank • Non-marking wheels • Shock and acid resistant roto-molded polyethylene tanks • The lower tank is also battery compartment • Low noise operation thanks to the protected positioning of vacuum motor • Separate chemist (optional) • Possibility to mount Li-ion batteries • Accessory storage facility on request • Automatic lifting of the brush plate • With interchangeable brush head • **Adjustable brush pressure till 43 kg (continuous duty)** • FMS (Fleet Management System) available on request

Available also full optional version: gel batteries, battery charger, detergent dosing kit, water stop system and hook kit MOTION 70 BT cod. 37036-00007

TECHNICAL DATA

	Motion 70BT	Motion 70BT	Motion 70BT	Motion 70BT
code	37036-00003	37036-00016	37036-00017	37036-00018
power supply	24 V	24 V (battery charger included)	24 V (battery charger included)	24 V (battery and charger included)
scrubbing/squeegee width	700/965mm	700/965 mm	700/965 mm	700/965 mm
max working capacity	3700 m^2/h	3700 m^2/h	3700 m^2/h	3700 m^2/h
solution tank capacity	70 l / 18.4 gal	70 l / 18.4 gal	70 l / 18.4 gal	70 l / 18.4 gal
recovery tank capacity	83 l / 21.9 gal	83 l / 21.9 gal	83 l / 21.9 gal	83 l / 21.9 gal
traction	automatic/180W	automatic/180W	automatic/180W	automatic/180W
RPM/pressure on the brushes	150/43 kg / 94.8 lbs	150/43 kg / 94.8 lbs	150/43 kg / 94.8 lbs	150/43 kg / 94.8 lbs
brush motor power	2x400W	2x400W	2x400W	2x400W
detergent solution system	solenoid valve	solenoid valve	solenoid valve + dosing kit	solenoid valve
depression/vacuum motor	1200 mmH_2O/400W	1200 mmH_2O/400W	1200 mmH_2O/400W	1200 mmH_2O/400W
dimension (cm)/weight	134x81x116/130 kg	134x81x116/132 kg	134x81x116/134 kg	134x81x116/190 kg

PLUS

Interchangeable heads with orbital function and roller brush

Large and easily inspectable roto-molded polyethylene tank, shock and acid resistant

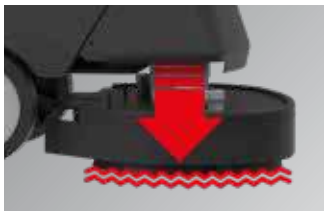

Equipped with an actuator for automatic brush plate activation and adjustable brush pressure continue 43Kg/94.8 lbs

Chemical dispenser tank (optional) standard on model code 37036-00017 and 37036-00007 Motion 70BT

STANDARD EQUIPMENT

• 2 x 10002-13271 PP brush Ø 360 mm - 14"	• 00005-02592 Front squeegee blade L.1025 mm Th. 2,5 mm • 00005-02591Rear squeegee blade L.1070 mm Th.3 mm	• 1 x 00056-00062 On-board Battery charger 24V 10A 100-240V 50-60Hz Only model cod. 37036-00016/37036-00017/ 37036-00018/37036-00007	• 2 x 00055-00130 Gel Battery 12V 105A/C5-120A/C20 Only model cod. 37036-00018/37036-00007	• 00014-01349 Refill hose 1,7m

OPTIONAL

• 2 x 00055-00149 Tubular battery Pb-acid 12V 118Ah C5	• 2 x 00055-00130 Gel Battery 12V 105A/C5-120A/C20	• 2 x 00055-00181 Cyclic AGM battery 12V 136Ah C5-150Ah C2	• 00005-02635 Polyurethane front blade L.1025 TH.2,5 Sh.40 • 00005-02634 Polyurethane rear blade L.1070 TH.3 Sh.40	• 2 x 10002-13272 Tynex brush Ø 360 mm-14" • 2 x 10002-13273 PP brush 03 Ø 360 mm-14" • 2 x 10002-13274 PES brush Ø 360 mm-14"
• 2 x 10002-13275 EWU pad driver Ø 360 mm 14"	(kit 5 pz) • 10001-09934 - Ø 356 mm-14"- beige • 10001-09935 - Ø 356 mm-14"- green • 10001-09936 - Ø 356 mm-14"- black	• 10001-12852 accessory hook kit		

XXS mini 55BT

MORE INFO

CHARACTERISTICS

• Designed for the maintenance and deep cleaning of large areas with a very important reduction of cleaning cost • Very compact size and great maneuverability like walk behind models: suited for maintenance cleaning • 28 kg of constant pressure on the brushes • Great working autonomy (3.5h) thanks to the possibility to use 2 batteries 12 V 105 Ah and to rear wheel-drive • Large load tank capacity, resulting in reduced numbers of stops and maximum use of battery for effective operation of the machine • Ergonomic steering wheel of new design with user friendly controls and digital display • Easy access to electrical components • Inspection cover for fast and easy cleaning and sanification of dirt water tank • Automatic device that stops brushes and detergent water outflow when the machine is stationary • Self-levelling brush plate • Automatic detergent dosing system (optional) • USB socket for mobile charging (optional) • Front working led light (optional) • Float filling system with aquastop (optional) or hose filling system (optional)

TECHNICAL DATA

	XXS mini 55BT	XXS mini 55BT	XXS mini 55BT
code	37035-00001	37035-00027	37035-00003
power supply	24V	24V (Battery charger included)	24V (Battery and Battery charger included)
scrubbing/squeegee width	550/650mm	550/650mm	550/650mm
max working capacity	3000 m²/h	3000 m²/h	3000 m²/h
solution tank capacity	70 l/18.4 gal	70 l/18.4 gal	70 l/18.4 gal
recovery tank capacity	75 l/19.8 gal	75 l/19.8 gal	75 l/19.8 gal
traction	rear wheel-drive/300 W	rear wheel-drive/300 W	rear wheel-drive/300 W
RPM/pressure on the brushes	150/22 kg / 330.6/48.5 lbs	150/22 kg / 330.6/48.5 lbs	150/22 kg / 330.6/48.5 lbs
brush motor power	1 X 380 W	1 X 380 W	1 X 380 W
max gradient empty/full tank	13%/10%	13%/10%	13%/10%
depression/vacuum motor	1300 mmH_2O/400 W	1300 mmH_2O/400 W	1300 mmH_2O/400 W
dimension (cm)/weight	117x65x118/128 kg	117x65x118/131 kg	117x65x118/200 kg

PLUS

New control panel with electronics ready for FMS system

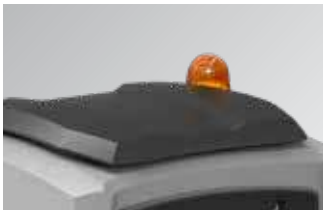

Large and easily inspectable tank

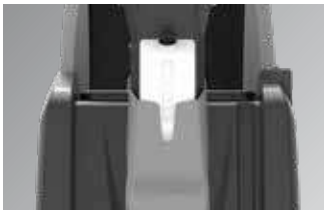

Chemical dispenser tank (optional)

Brush plate with automatic release and engagement. Squeegee in protected position

STANDARD EQUIPMENT

• 10002-14574 PP brush Ø 533 mm – 21″	• 00005-02370 Front squeegee blade L704 mm Th. 3mm • 00005-02371 Oil-proof PU rear squeegee blade L736 mm Th. 3mm	• 00056-00108 On-board battery charger kit 24V 15A/20A (only for code models 37035-00027/37035-00003)	• 2 x 00055-00180 AGM GEL Battery 12V 106A/C5-125A/C20 (only for code model 37035-00003)	

OPTIONAL

• 00056-00109 battery charger 24V 30A 180-240VAC Li-PO4 AND. 80A	• 00005-02631 Polyurethane front blade L.704 TH.3 Sh.40 • 00005-02371 Polyurethane rear blade L.736 TH.3 Sh.40	• 10002-14572 Tynex brush Ø 533 mm-21″ • 10002-14571 PP 03 brush Ø 533 mm-21″ • 10002-14573 PES brush Ø 533 mm-21″	• 10002-14570 EWU drive disc Ø 505 mm-20″	(kit 5 pz) • 10001-09915 - Ø 533 mm-21″- beige • 10001-09920 - Ø 533 mm-21″- green • 10001-09925 - Ø 533 mm-21″- black
• 00014-01349 Filling tube L=1.7m	• 00008-01515 Filling kit with aquastop system			

XXS mini 60BT

MORE INFO

CHARACTERISTICS

• Designed for the maintenance and deep cleaning of large areas with a very important reduction of cleaning cost • Very compact size and great maneuverability like walk behind models: suited for maintenance cleaning • 28 kg of constant pressure on the brushes • Double counter rotating brush (61 cm of scrubbing width) obtaining better stability and constant pressure • Great working autonomy (3.5h) thanks to the possibility to use 2 batteries 12 V 105 Ah and to rear wheel-drive • Large load tank capacity, resulting in reduced numbers of stops and maximum use of battery for effective operation of the machine • Ergonomic steering wheel of new design with user friendly controls and digital display • Easy access to electrical components • Inspection cover for fast and easy cleaning and sanification of dirt water tank • Automatic device that stops brushes and detergent water outflow when the machine is stationary • Self-levelling brush plate • Automatic detergent dosing system (optional) • USB socket for mobile charging (optional) • Front working led light (optional) • Float filling system with aquastop (optional) or hose filling system (optional)

TECHNICAL DATA

	XXS mini 60BT	XXS mini 60BT	XXS mini 60BT
code	37035-00002	37035-00028	37035-00005
power supply	24V	24V (Battery charger included)	24V (Battery and Battery charger included)
scrubbing/squeegee width	600/650mm	600/650mm	600/650mm
max working capacity	3200 m²/h	3200 m²/h	3200 m²/h
solution tank capacity	70 l/18.4 gal	70 l/18.4 gal	70 l/18.4 gal
recovery tank capacity	75 l/19.8 gal	75 l/19.8 gal	75 l/19.8 gal
traction	rear wheel-drive/300 W	rear wheel-drive/300 W	rear wheel-drive/300 W
RPM/pressure on the brushes	150/28 kg / 330.6/61.7 lbs	150/28 kg / 330.6/61.7 lbs	150/28 kg / 330.6/61.7 lbs
brush motor power	2 X 300 W	2 X 300 W	2 X 300 W
max gradient empty/full tank	13%/10%	13%/10%	13%/10%
depression/vacuum motor	1300 mmH_2O/400 W	1300 mmH_2O/400 W	1300 mmH_2O/400 W
dimension (cm)/weight	117x65x118/133 kg	117x65x118/136 kg	117x65x118/205 kg

PLUS

New control panel with electronics ready for FMS system

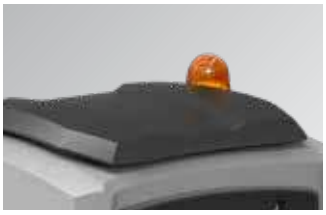

Large and easily inspectable tank

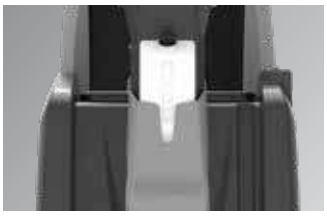

Chemical dispenser tank (optional)

Brush plate with automatic release and engagement. Squeegee in protected position

STANDARD EQUIPMENT

• 2 x 10002-08092 PP brush Ø 275 mm - 10,5″	• 00005-02370 Front squeegee blade L704 mm Th.3mm • 00005-02371 Oil-proof PU rear squeegee blade L736 mm Th 3mm	• 00056-00108 On-board battery charger kit 24V 15A/20A (only for code models 37035-00028/37035-00005)	• 2 x 00055-00180 AGM GEL Battery 12V 106A/C5-125A/C20 (only for code model 37035-00005)	

OPTIONAL

• 00056-00109 battery charger 24V 30A 180-240VAC Li-PO4 AND. 80A	• 00005-02631 Polyurethane front blade L.704 TH.3 Sh.40 • 00005-02371 Polyurethane rear blade L.736 TH.3 Sh.40	• 2x 10002-08093 Tynex brush Ø 275 mm-10,5″ • 2x 10002-08094 brush PP 0,3 Ø 275 mm-10,5″ • 2x 10002-08095 PES brush Ø 275 mm-10,5″	• 2x 10002-08096 EWU drive disc Ø 275mm-10,5″	(kit 5 pz) • 10001-09927 - Ø 280 mm-11″- beige • 10001-09928 - Ø 280 mm-11″- green • 10001-09929 - Ø 280 mm-11″- black
• 00014-01349 Filling tube L=1.7m	• 00008-01515 Filling kit with aquastop system			

Comfort XXS

Model:
37010-00053

Model:
37010-00053
37010-00060

MORE INFO

CHARACTERISTICS

Designed for the maintenance and deep cleaning of large areas (up to 3200 m².) with a very important reduction of cleaning cost. Very compact size and great maneuverability like walk behind models: suited for maintenance cleaning. • 32 kg. of constant pressure on the brushes. • Double counter rotating brush (66 cm of scrubbing width) obtaining better stability and constant pressure.• Great working autonomy thanks to the possibility to use 4 batteries 6 V 240 Ah and to rear wheel-drive. • Large load tank capacity (real load of 85 l.), resulting in reduced numbers of stops and maximum use of battery for effective operation of the machine. • Ergonomic steering wheel of new design with user friendly controls and digital display. • Easy access to electrical components.• Inspection cover for fast and easy cleaning and sanification of dirt water tank. • Automatic device that stops brushes and detergent water outflow when the machine is stationary. • Self-levelling brush plate. • **Automatic detergent dosing system**.

TECHNICAL DATA

	Comfort XXS 66 BT	Comfort XXS 66 BT	Comfort XXS 66 BT
code	37010-00052	37010-00060	37010-00053
power supply	24V	24V (battery charger included)	24V (batteries and battery charger included)
scrubbing/squeegee width	660/855 mm	660/855 mm	660/855 mm
max working capacity	3250 m²/h	3250 m²/h	3250 m²/h
solution tank capacity	80 l/19.81 gal	80 l/19.81 gal	80 l/19.81 gal
recovery tank capacity	80-85 l/19.81-21.13 gal	80-85 l/19.81-21.13 gal	80-85 l/19.81-21.13 gal
traction	rear wheel-drive/400 W	rear wheel-drive/400 W	rear wheel-drive/400 W
RPM/pressure on the brushes	170/32 kg/70.54 lbs	170/32 kg/70.54 lbs	170/32 kg/70.54 lbs
brush motor power	2 X 400 W	2 X 400 W	2 X 400 W
max gradient empty/full tank	13%/10%	13%/10%	13%/10%
depression/vacuum motor	1300 mmH_2O/400 W	1300 mmH_2O/400 W	1300 mmH_2O/400 W
dimension (cm)/weight	123x63x121/139 kg	123x63x121/142 kg	123x63x121/217 kg

PLUS

Great working autonomy thanks to the possibility to use 4 batteries 6 V 180 Ah granting continuous working up. Possibility to use also 2 batteries 12V. Less battery consumption thanks to rear wheel-drive. Large load tanks made of shock and acid proof polyethylene (real load of 85 l.), avoiding frequent stop for refilling.

User friendly control panel. Steering wheel with digital controls and display. Squeegee and brush plate mechanical and user friendly lifting lever: min. maintenance cost training time for the users. Scrubbing unit with double brush with brush plate made of steel for a great pressure (32 Kg.) on the floor resulting in an easy and deep cleaning of any kind of dirt.

Detergent solution is cleansed by an external completely accessible filter, that holds any impurities, thus protecting the solenoid valve. The easy access to all internal components of XXS make it possible to reduce maintenance cost. Detergent tank 2lt.

The comfortable and ergonomic seat allows the operator to work effortless for a long time, improving productivity. Its very compact size make it perfect to work in small areas where walk behind models are usually used. The use of XXS makes working easier and quicker with a huge saving of time.

STANDARD EQUIPMENT

• 2 x 10002-08102 PP Brush Ø 330 mm - 13"	• 00005-02293 Front squeegee blade L.960 mm Th. 2,5 mm • 00005-02292 Rear squeegee blade L.1000 mm Th. 3 mm	• 00056-00048 On-board Battery charger 24V 20A (only for models code: 37010-00053/37010-00060)	• 2 x 00055-00130 Gel battery 12V 105 A/C 5/120A C20 (only for model code: 37010-00053)	

OPTIONAL

• 4 x 00055-00013 Tubular battery Pb-acid 6V 180Ah C20 + 2 x 10002-07046 connection cable batteries	• 4 x 00055-00142 Gel battery 6 MFP 180 6V 180Ah C5 + 2 x 10002-07046 connection cable batteries	• 2 x 00055-00149 Tubular battery Pb-acid 12V 118 Ah C5	• 00056-00067 Battery Charger 24V 30A 115-240/50-60 Connection cable batteries 00056-00067 SB50-SB80: 10002-08044	• 00005-02289 Polyurethane front blade L.960 TH.3 Sh.40 • 00005-02291 Polyurethane rear blade L.1000 TH.4 Sh.40
• 2 x 10002-08098 Tynex brush Ø 330 mm-13" • 2 x 10002-08099 PP 0,3 brush Ø 330 mm-13" • 2 x 10002-08100 PES brush Ø 330 mm - 13"	• 2 x 10002-08101 EWU pad driver Ø 330 mm-13"	(5 pcs package) • 10001-09911 - Ø 340 mm - 13"- beige • 10001-09916 - Ø 340 mm - 13"- green • 10001-09921 - Ø 340 mm - 13"- black	• 10001-09859 Flashing light	• 10001-10972 Vacuum kit (on request)

Comfort XXS Up

Model:
37010-00079

Model:
37010-00079

MORE INFO

CHARACTERISTICS

Designed for the maintenance and deep cleaning of large areas (up to 3200 m².) with a very important reduction of cleaning cost. Very compact size and great maneuverability like walk behind models: suited for maintenance cleaning. • 32 kg. of constant pressure on the brushes. • Double counter rotating brush (66 cm of scrubbing width) obtaining better stability and constant pressure. • Great working autonomy thanks to the possibility to use 4 batteries 6 V 240 Ah and to rear wheel-drive. • Large load tank capacity (real load of 85 l.), resulting in reduced numbers of stops and maximum use of battery for effective operation of the machine. • Ergonomic steering wheel of new design with user friendly controls and digital display. • Easy access to electrical components. • Inspection cover for fast and easy cleaning and sanification of dirt water tank. • Automatic device that stops brushes and detergent water outflow when the machine is stationary. • Self-levelling brush plate. • **Automatic detergent dosing system**. • **Automatic brush plate and squeegee lifting system**

TECHNICAL DATA

	Comfort XXS 66 Up	Comfort XXS 66 Up
code	37010-00075	37010-00079
power supply	24V	24V (batteries and batteries charger included)
scrubbing/squeegee width	660/855 mm	660/855 mm
max working capacity	3250 m²/h	3250 m²/h
solution tank capacity	80 l/19.81 gal	80 l/19.81 gal
recovery tank capacity	80-85 l/19.81-21.13 gal	80-85 l/19.81-21.13 gal
traction	rear wheel-drive/400 W	rear wheel-drive/400 W
RPM/pressure on the brushes	170/32 kg/70.54 lbs	170/32 kg/70.54 lbs
brush motor power	2 X 400 W	2 X 400 W
max gradient empty/full tank	13%/10%	13%/10%
depression/vacuum motor	1300 mmH_2O/400 W	1300 mmH_2O/400 W
dimension (cm)/weight	123x63x121/139 kg	123x63x121/139 kg

PLUS

Great working autonomy thanks to the possibility to use 4 batteries 6 V 180 Ah (mod. 37010-00079) granting continuous working up. Possibility to use also 2 batteries 12V. Less battery consumption thanks to rear wheel-drive. Large load tanks made of shock and acid proof polyethylene (real load of 85 l.)

User friendly control panel. Steering wheel with digital controls and display. Squeegee and brush plate mechanical and user friendly lifting lever: min. maintenance cost training time for the users. Scrubbing unit with double brush with brush plate made of steel for a great pressure (32 Kg.) on the floor resulting in an easy and deep cleaning of any kind of dirt.

Detergent solution is cleansed by an external completely accessible filter, that holds any impurities, thus protecting the solenoid valve. The easy access to all internal components of XXS make it possible to reduce maintenance cost. Detergent tank 2lt.

The comfortable and ergonomic seat allows the operator to work effortless for a long time, improving productivity. Its very compact size make it perfect to work in small areas where walk behind models are usually used. The use of XXS makes working easier and quicker with a huge saving of time.

STANDARD EQUIPMENT

• 2 x 10002-08102 PP Brush Ø 330 mm - 13"	• 00005-02293 Front squeegee blade L.960 mm Th. 2,5 mm • 00005-02292 Rear squeegee blade L.1000 mm Th. 3 mm	• 00056-00048 On-board Battery charger 24V 20A only for models code: 37010-00079	• 2 x 00055-00130 Gel battery 12V 105 A/C 5/120A C20 only for models code: 37010-00079	

OPTIONAL

• 10001-13866 battery LIFEPO4 25,6V 50AH 1280WH + connecting cables 10001-13838	• 4 x 00055-00013 Tubular battery Pb-acid 6V 180Ah C20 + 2 x 10002-07046 connection cable batteries	• 4 x 00055-00142 Gel battery 6 MFP 180 6V 180Ah C5 + 2 x 10002-07046 connection cable batteries	• 2 x 00055-00149 Tubular battery Pb-acid 12V 118 Ah C5	• 00056-00067 Battery Charger 24V 30A 115-240/50-60 Connection cable batteries 00056-00067 SB50-SB80: 10002-08044
• 00005-02289 Polyurethane front blade L.960 TH.3 Sh.40 • 00005-02291 Polyurethane rear blade L.1000 TH.4 Sh.40	• 2 x 10002-08098 Tynex brush Ø 330 mm-13" • 2 x 10002-08099 PP 0,3 brush Ø 330 mm-13" • 2 x 10002-08100 PES brush Ø 330 mm - 13"	• 2 x 10002-08101 EWU pad driver Ø 330 mm-13"	(5 pcs package) • 10001-09911 - Ø 340 mm - 13"- beige • 10001-09916 - Ø 340 mm - 13"- green • 10001-09921 - Ø 340 mm - 13"- black	• 10001-09859 Flashing light
• 10001-10972 Vacuum kit (on request)				

Comfort XS-R1 Essential

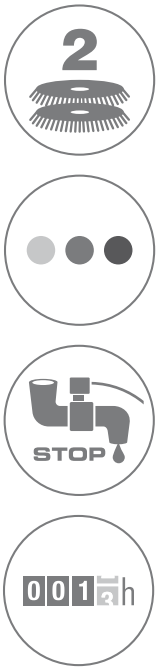

MORE INFO

CHARACTERISTICS

• Capable to work for the maintenance and deep cleaning of large areas (up to 3.700 m²) with a very important reduction of cost of cleaning • More than 50 kg of constant pressure on the brushes • Large load tank capacity, resulting in reduced number of stops and maximum use of battery charge for effective operation of the machine • Compact size (810 mm) • Stability even when fully loaded, front independent wheeldrive with tight steering radius • Recovery tank control window for cleaning and easy ordinary maintenance • Easy access to electrical components • Automatic device that stops brushes and detergent water outflow when the machine is stationary • Self-levelling brushes.• New control panel • Automatic brush release • Separate eco mode for brush and suction

TECHNICAL DATA

	Comfort XS-R1 75 Essential	Comfort XS-R1 85 Essential
code	37006-00068	37006-00070
power supply	24V	24V
scrubbing/squeegee width	750/900 mm	850/1000 mm
max working capacity	4350 m²/h	5000 m²/h
solution tank capacity	110 l/29.05 gal	110 l/29.05 gal
recovery tank capacity	130-155 l/34.35-40.95 gal	130-155 l/34.35-40.95 gal
traction type/power	front motorwheel/600 W	front motorwheel/600 W
RPM/pressure on the brushes	170/50 kg/110.23 lbs	170/50 kg/110.23 lbs
brush motor power	2 x 400 W	2 x 400 W
max gradient empty/full tank	13%/10%	13%/10%
depression/vacuum motor	1300 mmH_2O/400W	1300 mmH_2O/400W
dimension (cm)/weight	146x81x138/184 kg	146x87x138/187 kg

PLUS

The detergent water tank serves as battery compartment, allowing the housing of great capacity batteries granting continuous working time up . Large capacity shock and acid proof polyethylene tank (110 l)improves productivity avoiding frequent refilling and idle time.

Simple and intuitive controls reduce operator's training time. Easy mechanical brush plate and squeegee lifting system, for low maintenance costs. The enbloc brush plate apply a very high pressure (50 kg) to the floor, strongly and deeply removing any kind of dirt.

New control panel with digital controls and display. Digital display: with hour meter, battery charge level indicator, empty water tank level indicator, forward/ reverse traction indicator. Speed control adjustment, horn, suction motor switch with delayed switch-off, brush plate lifting/lowering selector switch, brush motor switch.

The ergonomic and comfortable shape of the machine allows the operator to work effortless for a long time, improving productivity.

STANDARD EQUIPMENT

Comfort XS-R1 75 • 2 x 10002-08108 PP brush Ø 360 mm - 14" **Comfort XS-R1 85** • 2 x 10002-08138 PP brush Ø 430 mm - 17"	**Comfort XS-R1 75** • 00005-02240 Front squeegee blade L.925 mm Shore 40 Th. 3 mm	**Comfort XS-R1 75** • 00005-02237 Rear squeegee blade L.1015 mm Shore 30 Th. 4 mm	**Comfort XS-R1 85** • 00005-02270 Front squeegee blade L.1027 mm Shore 40 Th. 3 mm	**Comfort XS-R1 85** • 00005-02269 Rear squeegee blade L.1150 mm Shore 33 Th. 4 mm

OPTIONAL

• 4 x 00055-00013 Tubular battery Pb-acid 6V 180Ah C5	• 4 x 00055-00142 GEL Battery 6 MFP 180 6V 180Ah C5	• 00056-00067 Battery Charger 24V 30A 115-240/50-60 Connection cable batteries 00056-00067 SB50-SB80: 10002-08044	• 10001-08560 On-board Battery charger kit 24V - 20A	• 00005-02253 Polyurethane front blade L.925 TH.3 Sh.40 • 00005-02252 Polyurethane rear blade L.1015 TH.4 Sh.40
• 00005-02273 Polyurethane front blade L.1027 TH.3 • 00005-02274 Polyurethane rear blade L.1150 TH.4	• 2x 10002-08109 Tynex brush Ø 360 mm-14" • 2x 10002-08110 PP 0,3 brush Ø 360 mm-14" • 2x 10002-08111 PES brush Ø 360 mm - 14"	• 2x 10002-08118 Tynex brush Ø 430 mm-17" • 2x 10002-08119 PP 0,3 brush Ø 430 mm-17" • 2x 10002-08120 PES brush Ø 430 mm - 17"	• 2x 10002-08137 EWU pad driver Ø 380 mm-15" • 2x 10002-13151 EWU pad driver Ø 430 mm-17"	(5 pcs package) • 10001-09944 - Ø 380 mm - 15"- beige • 10001-09945 - Ø 380 mm - 15"- green • 10001-09942 - Ø 380 mm - 15"- black
(5 pcs package) • 10001-09913 - Ø 430 mm - 17"- beige • 10001-09918 - Ø 430 mm - 17"- green • 10001-09923 - Ø 430 mm - 17"- black				

Comfort XS-R1 Up

MORE INFO

CHARACTERISTICS

• Capable to work for the maintenance and deep cleaning of large areas (up to 4.000 m²) with a considerable reduction of cleaning costs • More than 50 kg of constant pressure on the brushes • Large load tank capacity, resulting in reduced number of stops and maximum use of battery charge for effective operation of the machine • Compact size (810 mm) • Stability even when fully loaded, front independent wheeldrive with tight steering radius • Recovery tank control window for cleaning and easy ordinary maintenance • Automatic brush plate lifting system • Automatic squeegee lifting system • Automatic squeegee lifting while reverse going • Automatic device that stops brushes and detergent water outflow when the machine is stationary • Antifoam device • Self-levelling brushes • Integrated on-board battery charger • Automatic brush release • Separate eco mode for brush and suction

TECHNICAL DATA

	Comfort XS-R1 75 Up	Comfort XS-R1 85 Up
code	37006-00080	37006-00082
power supply	24V (battery charger included)	24V (battery charger included)
scrubbing/squeegee width	750/900 mm	850/1000 mm
max working capacity	4350 m²/h	5000 m²/h
solution tank capacity	110 l/29.05 gal	110 l/29.05 gal
recovery tank capacity	130-155 l/34.35-40.95 gal	130-155 l/34.35-40.95 gal
traction type/power	front motorwheel/600 W	front motorwheel/600 W
RPM/pressure on the brushes	170/50 kg/110.23 lbs	170/50 kg/110.23 lbs
brush motor power	2 x 400 W	2 x 400 W
max gradient empty/full tank	13%/10%	13%/10%
depression/vacuum motor	1300 mmH_2O/400W	1300 mmH_2O/400W
dimension (cm)/weight	146x81x138/189 kg	146x87x138/195 kg

PLUS

The easy access to the recovery tank allows fast cleaning and sanification of the tank; the tilting tank together with a large size drain hose allow the complete emptying of the tank and the removal of any type of solid dirt. The antifoam device protects suction motor, as well as the electronic floating switch that stops suction when the tank is full.

All motors are protected by thermal breakers. The detergent water tank serves as battery compartment, allowing the housing of great capacity batteries. Battery charger and suction motor are placed the recovery tank,vacuum motor allows to drastically reduce the operating noise.

Comfort XS-R1 Up is equipped with actuators for the automatic lifting of the brush plate and squeegee. New control panel with digital controls and display. Hour meter, battery charge level indicator, empty water tank level indicator and forward/reverse traction indicator. Speed control adjustment, horn, suction motor

The ergonomic and comfortable shape of the machine allows the operator to work effortless for a long time, improving productivity. Thanks to the compact dimensions the machine can work with agility even in narrow spaces.

STANDARD EQUIPMENT

Comfort XS-R1 75 Up • 2 x 10002-08108 PP brush Ø 360 mm - 14"	**Comfort XS-R1 85 Up** • 2 x 10002-08138 PP brush Ø 430 mm - 17"	**Comfort XS-R1 75 Up** • 00005-02240 Front squeegee blade L.925 mm Shore 40 Th. 3 mm	**Comfort XS-R1 75 Up** • 00005-02237 Rear squeegee blade L.1015 mm Shore 30 Th. 4 mm	**Comfort XS-R1 85 Up** • 00005-02270 Front squeegee blade L.1027 mm Shore 40 Th. 3 mm
Comfort XS-R1 85 Up • 00005-02269 Rear squeegee blade L.1150 mm Shore 33 Th. 4 mm	• 00056-00048 On-board Battery charger 24V 20A (only for model code: 37006-00080/37006-00082)			

OPTIONAL

• 4 x 00055-00013 Tubular battery Pb-acid 6V 180Ah C5	• 4 x 00055-00142 GEL Battery 6 MFP 180 6V 180Ah C5	• 00056-00067 Battery Charger 24V 30A 115-240/50-60 Connection cable batteries 00056-00067 SB50-SB80: 10002-08044	• 00005-02253 Polyurethane front blade L.925 TH.3 Sh.40 • 00005-02252 Polyurethane rear blade L.1015 TH.4 Sh.40	• 00005-02273 Polyurethane front blade L.1027 TH.3 • 00005-02274 Polyurethane rear blade L.1150 TH.4
• 2x 10002-08109 Tynex brush Ø 360 mm-14" • 2x 10002-08110 PP 0,3 brush Ø 360 mm-14" • 2x 10002-08111 PES brush Ø 360 mm - 14"	• 2x 10002-08118 Tynex brush Ø 430 mm-17" • 2x 10002-08119 PP 0,3 brush Ø 430 mm-17" • 2x 10002-08120 PES brush Ø 430 mm - 17"	• 2x 10002-08137 EWU pad driver Ø 380 mm-15" • 2x 10002-13151 EWU pad driver Ø 430 mm-17"	(5 pcs package) • 10001-09944 - Ø 380 mm - 15"- beige • 10001-09945 - Ø 380 mm - 15"- green • 10001-09942 - Ø 380 mm - 15"- black	(5 pcs package) • 10001-09913 - Ø 430 mm - 17"- beige • 10001-09918 - Ø 430 mm - 17"- green • 10001-09923 - Ø 430 mm - 17"- black

Comfort S-R 100

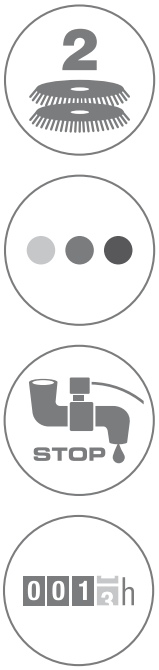

MORE INFO

CHARACTERISTICS

• Suitable for maintenance and deep cleaning of medium and large areas (up to 7.400 m²) with a considerable reduction of cleaning costs • Large load tank capacity, resulting in reduced number of stops. • Quick refilling system • Antifoam device • High-performance batteries resulting in high-working efficiency. • Stability even when fully loaded. • Up to more than 130 kg max of pressure on the brushes (S-R 100 Up) • Self-levelling brushes • Front independent wheel-drive with tight steering radius. • Total wheel protection (S-R 100 Up) • Cleaning solution distribution by pump (S-R 100 Up) • Easy access to electrical components • Automatic brush plate and squeegee lifting system. Automatic squeegee lifting while reverse going • Automatic device that stops brushes and detergent water outflow when the machine is stationary • Frontal light (S-R 100 Up) • Possibility to use Li-ion batteries • Flashing light standard

TECHNICAL DATA

	Comfort S-R 100	Comfort S-R 100 Up
code	37007-00025	37007-00027
power supply	36V	36V
scrubbing/squeegee width	1000/1000 mm	1000/1000 mm
max working capacity	6500 m²/h	7400 m²/h
solution tank capacity	140 l/36.99 gal	140 l/36.99 gal
recovery tank capacity	150-180 l/39.6-47 gal	150-180 l/39.6-47 gal
traction type/power	front motorwheel/900 W	front motorwheel/1200 W
RPM/pressure on the brushes	150/75 kg max/165 lbs	150/130 kg max/286 lbs
brush motor power	2 x 700 W	2 x 700 W
max gradient empty/full tank	10%/8%	16%/14%
depression/vacuum motor	1734 mmH_2O/550W	1734 mmH_2O/550W
dimension (cm)/weight	180x103x150/300 kg	180x103x150/320 kg

PLUS

New brush plate 1000 mm for increased working capacity. Implementation of the ECO MODE function for brushes and suction to reduce energy consumption and noise. Acquastop kit to allow solution tank refilling without the operator's presence. Automatic brush attachment and release.

The control electronics allows the pump to be managed according to the specific washing requirements. 1200W motor wheel for increased performance in terms of speed and climbing ability. Parking brake to ensure the necessary safety in case of steep slopes. Pressure control on the brush plate up to 130Kg.

Quick lock recovery tank cap allows for fast and easy cleaning and sanification of the tank; the tilting tank together with a large size drain hose allow the complete emptying of the tank and the removal of any type of solid dirt. The antifoam device protects suction motor, as well as the electronic floating switch that stops suction when the tank is full.

70 kg of continuous brush plate pressure with Self Leveling System to strongly and deeply removing any kind of dirt on any kind of floor. Strong oil-proof polyurethane wheels. 36V 300 Ah C5 battery box allowing continuous working time up to 5 hours. Possibility to use Li-Ion batteries.

STANDARD EQUIPMENT

• 2 x 10002-13159 PP brush Ø 483 mm - 19"	• 00005-02270 Front squeegee blade L.1027 mm Shore 40 Th. 3 mm	• 00005-02269 Rear squeegee blade L.1150 mm Shore 33 Th. 4 mm	• 2x 00072-00423 red bumper	

OPTIONAL

• 00055-00108 Battery box Pb-acid 36V 300Ah C5 • 00055-00127 Battery box Gel 36V 261Ah C5	• 00056-00070 battery charger 36V 60A 230V/50-60Hz 160A	• 3x 00055-00171 Battery AGM 12V 210Ah 2520Wh + 2x 00058-03803 connection cables	• 3x 00055-00182 Battery LIFeP04 38,4V 60Ah 2304Wh	• 00005-02273 Polyurethane front blade L.1027 TH. 3 • 00005-02274 Polyurethane rear blade L.1150 TH. 4
• 2x 10002-13160 Tynex brush Ø 483 mm-19" • 2x 10002-13161 PP 0,3 brush Ø 483 mm-19" • 2x 10002-13162 PES brush Ø 483 mm - 19"	• 10002-13163 - 2x EWU pad driver Ø 483 mm-19"	(5 pcs package) • 10001-11427 - Ø 488 mm-19"- beige • 10001-11428 - Ø 488 mm-19"- green • 10001-11429 - Ø 488 mm-19"- black		

Comfort M

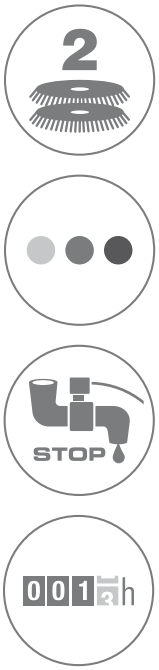

MORE INFO

CHARACTERISTICS

• Suitable for maintenance and deep cleaning of medium and large areas (up to 6.000 m²) • More than 90/120 kg of constant pressure on the brushes • Large load tank capacity, resulting in reduced number of stops and maximum use of battery charge for effective operation of the machine • Stability even when fully loaded • Front independent wheel-drive with tight steering radius • Easy access to electrical components • Automatic brush plate lifting system • Automatic squeegee lifting system • Automatic squeegee lifting while reverse going • Automatic control system for brush rotation and detergent water outflow • Antifoam device • Self-levelling brush plate • Hour meter • High-performance batteries resulting in high-working efficiency. • Quick refilling system

TECHNICAL DATA

	Comfort M 102
code	37009-00005
power supply	36V
scrubbing/squeegee width	1020/1250 mm
max working capacity	7140 m²/h
solution tank capacity	200 l/52.84 gal
recovery tank capacity	210-240 l/55.5-63.4 gal
traction type/power	front motorwheel/900 W
RPM/pressure on the brushes	150/120 kg/246 lbs
brush motor power	1500 W
max gradient empty/full tank	10%/8%
depression/vacuum motor	1800 mmH_2O/550 W
dimension (cm)/weight	190x112x145/342 kg

PLUS

The unique anti foam device dramatically reduces the foam generation and prevents it from touching the suction motor, thus protecting its operation. The electronic floating switch stops suction when the tank is full. Large tank opening for fast and easy cleaning and sanification.

The strong V-shaped floor squeegee made of steel profile is widely adjustable and allows to combine the operation of the rubber blades with the high suction power, to get a perfect drying result on every surface. The special filter box retains solid debris and prevents the obstruction of the suction hose.

Easy to use thanks to the simple and user friendly controls. From the control panel the operator can adjust the maximum forward speed and the quantity of cleaning solution outflow, selecting the options most suitable to the dirt type. Job is simplified and made faster by the automatic lifting of the squeegee and of the brush plate.

Thanks to the optimal weight distribution and to the use of strong oil-proof polyurethane wheels the drive is perfect in all working conditions. The emptying of the solution water tank is quick with a simple and easy accessible mechanical tap.

STANDARD EQUIPMENT

• 2 x 10002-08127 PP brush Ø 483 mm - 19"	• 00005-02220 Front squeegee blade L.1270 mm Shore 40 Th. 4 mm	• 00005-02219 Rear squeegee blade L.1345 mm Shore 33 Th. 6 mm		

OPTIONAL

• 00055-00115 Battery box Pb-acid 36V 360Ah C5 • 00055-00150 Gel battery box 36V 320Ah C5	• 00056-00070 Battery Charger 24V/36V 50-60A - 220-240/50-60	• 00005-02263 Polyurethane front blade L.1270 TH. 4 • 00005-02249 Polyurethane rear blade L.1345 TH. 6	• 2x 10002-08128 Tynex brush Ø 483 mm-19" • 2x 10002-08129 PP 0,3 brush Ø 483 mm-19" • 2x 10002-08130 PES brush Ø 483 mm - 19"	• 2x 10002-08131 EWU pad driver Ø 483 mm-19"
(5 pcs package) • 10001-09914 - Ø 483 mm - 19"- beige • 10001-09919 - Ø 483 mm - 19"- green • 10001-09924 - Ø 483 mm - 19"- black				

Comfort L

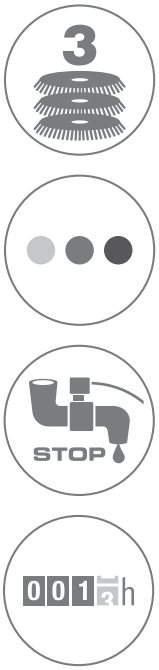

MORE INFO

CHARACTERISTICS

• Suitable for maintenance and deep cleaning of medium and large areas (up to 7.000 m²) • More than 120-170 kg of constant pressure on the brushes • 300 litres solution tank capacity allows exceptional autonomy and productivity • Stability even when fully loaded • Innovative traction system with three indipendent motor wheels controlled by electronic cards • Easy access to electrical components Automatic brush plate lifting system • Automatic squeegee lifting system • Automatic squeegee lifting while reverse going • Automatic control system for brush rotation and detergent water outflow • Antifoam device • Self-levelling brushes, hour meter, solenoid valve. High-performance batteries resulting in high-working efficiency. • Quick refilling system

TECHNICAL DATA

	Comfort L 122
code	37005-00002
power supply	36V
scrubbing/squeegee width	1220/1450 mm
max working capacity	8540 m²/h
solution tank capacity	280 l/73.97 gal
recovery tank capacity	315-340 l/83.2-89 gal
traction type/power	3-wheels drive/3 x 600 W
RPM/pressure on the brushes	150/170 kg/374 lbs
brush motor power	3 x 1000 W
max gradient empty/full tank	10%/8%
depression/vacuum motor	1800 mmH_2O/600 W
dimension (cm)/weight	222x130x169/607 kg

PLUS

Designed to perform the hardest work and to resist even to extreme stresses with maximum comfort; the frame is made of steel profiles with a thickness varying from 5 to 12 mm, protected with a high resistance corrosion-proof paint.

The unique anti foam device dramatically reduces the foam generation and prevents it from touching the suction motor, thus protecting its operation.
The electronic floating switch stops suction when the tank is full.
Large tank opening for fast and easy cleaning and sanification.

The cleaning solution tank with an exceptional capacity of 300 liters and the high autonomy of the battery ensure a productivity at the top of the range. The wide rear opening allows for an easy and quick refilling of the cleaning solution tank.

The motorwheels, designed and built by Lavor, grant optimal performances and exceptional reliability (over 30.000 hours). The innovative three-wheel drive system ensures perfect traction in every operating condition.

STANDARD EQUIPMENT

• 3 x 10002-08112 PP brush Ø 406 mm - 16"	• 00005-02222 Front squeegee blade L.1500 mm Shore 40 Th. 4 mm	• 00005-02221 Rear squeegee blade L.1580 mm Shore 33 Th. 6 mm		

OPTIONAL

• 00055-00137 Battery box Pb-acid 36V 525 Ah C5 • 00055-00101 Gel battery box 36V 400 Ah C5	• 00056-00070 Battery Charger 24V/36V 50-60A - 220-240/50-60	• 00005-02264 Polyurethane front blade L.1500 TH. 4 • 00005-02265 Polyurethane rear blade L.1580 TH. 5	• 3x 10002-08113 Tynex brush Ø 406 mm-16" • 3x 10002-08114 PP 0,3 brush Ø 406 mm-16" • 3x 10002-08115 PES brush Ø 406 mm - 16"	• 3x 10002-08116 EWU pad driver Ø 406 mm-16"
(5 pcs package) • 10001-09912 - Ø 406 mm - 16"- beige • 10001-09917 - Ø 406 mm - 16"- green • 10001-09922 - Ø 406 mm - 16"- black				

LITHIUM-ION BATTERY

FAST CHARGING, MAXIMUM POWER

Maximum power only when needed

Maximum autonomy on ordinary cleaning

Fast full charge up to 80% in 1 hour

Compact and lightweight compared with traditional batteries

Reduced operation and maintenance costs

More ecological compared to gel or acid accumulators

NEW RANGE FLOOR SCRUBBER
WITH LITHIUM-ION BATTERY

MAXIMUM POWER ALWAYS READY FOR USE

FLOOR SCRUBBER DRIERS LITHIUM-ION RANGE

WALK BEHIND	
37004-00099	QUICK 36B with batteries charger / with Li-ion batteries 1xLi-NMCA 14,4V 50Ah 720Wh
37012-00081	DART 36B with batteries charger / with Li-ion batteries 1xLIFeP04 25,6V 30Ah 768Wh
37011-00119	DYNAMIC 45B with batteries charger / with Li-ion batteries 1xLIFeP04 25,6V 50Ah 1280Wh
37031-00178	FREE EVO 50B with batteries charger / with Li-ion batteries 1xLIFeP04 25,6V 50Ah 1280Wh
37031-00180	FREE EVO 50BT with batteries charger / with Li-ion batteries 1xLIFeP04 25,6V 50Ah 1280Wh
37033-00051	MOVING 55 B with batteries charger / with Li-ion batteries 1xLIFeP04 25,6V 50Ah 1280Wh with detergent
37033-00052	MOVING 55 B with batteries charger / with Li-ion batteries 2xLIFeP04 25,6V 50Ah 1280Wh with detergent
37033-00053	MOVING 55 BT with batteries charger / with Li-ion batteries 1xLIFeP04 25,6V 50Ah 1280Wh with detergent
37033-00054	MOVING 55 BT with batteries charger / with Li-ion batteries 2xLIFeP04 25,6V 50Ah 1280Wh with detergent
37036-00023	MOTION 60 BT with batteries charger / with Li-ion batteries 2xLIFeP04 25,6V 50Ah 1280Wh with detergent
37036-00024	MOTION 60 BT with batteries charger / with Li-ion batteries 1xLIFeP04 25,6V 105Ah 2688Wh with detergent
37036-00025	MOTION 70 BT with batteries charger / with Li-ion batteries 2xLIFeP04 25,6V 50Ah 1280Wh with detergent
37036-00026	MOTION 70 BT with batteries charger / with Li-ion batteries 1xLIFeP04 25,6V 105Ah 2688Wh with detergent
RIDE ON	
37035-00038	XXS MINI 55 BT with batteries charger / with Li-ion batteries 2xLIFeP04 25,6V 50Ah 1280Wh with detergent
37035-00040	XXS MINI 60 BT with batteries charger / with Li-ion batteries 2xLIFeP04 25,6V 50Ah 1280Wh with detergent
37010-00105	XXS 66 UP with batteries charger / with Li-ion batteries 2xLIFeP04 25,6V 50Ah 1280Wh with detergent
37006-00111	XS R1 75 UP with batteries charger / with Li-ion batteries 2xLIFeP04 25,6V 105Ah 2688Wh
37006-00112	XS R1 85 UP with batteries charger / with Li-ion batteries 2xLIFeP04 25,6V 105Ah 2688Wh

Scrubber drier accessories with lithium batteries

		QUICK 36B	DART 36B	DYNAMIC 45B	FREE EVO 50B	FREE EVO 50BT	MOVING 55 B	MOVING 55 B	MOVING 55 BT	MOVING 55 BT	MOTION 60 BT	MOTION 60 BT	MOTION 70 BT	MOTION 70 BT	XXS MINI 55 BT	XXS MINI 60 BT	XXS 66 UP	XS R1 75 UP	XS R1 85 UP
		37004-00099	37012-00081	37011-00119	37031-00178	37031-00180	37033-00051	37033-00052	37033-00053	37033-00054	37036-00023	37036-00024	37036-00025	37036-00026	37035-00038	37035-00040	37010-00105	37006-00111	37006-00112
BATTERIES																			
10001-13836	Battery set Li-NMCA 14,4V 50Ah 720Wh	S1																	
10001-13860	Battery set LIFeP04 25,6V 30Ah 768Wh		S1																
10001-13866	Battery set LIFeP04 25,6V 50Ah 1280Wh			S1	S1	S1	S1	S2	S1	S2	S2		S2		S2	S2	S2		
10001-13864	Battery set LIFeP04 25,6V 105Ah 2688Wh											S1		S1				S2	S2
BATTERY CHARGER																			
00056-00073	Battery charger 12V 20A UY360-1220 110-230V 50/60HZ	S1																	
00056-00110	Battery charger 24V-12A NE286 100-240V 50/60Hz LI-FePO4		S1				S1		S1										
00056-00076	Battery charger 24V-12A NE286			S1															
00056-00117	Battery charger CBH2D 24V 20A IUo -LI-ION MOLEX MINIFIT				S1	S1													
00056-00067	Battery charger 24V 30A 115-240 Sp. USA-EU connector 80A							S1		S1	S1	S1	S1	S1					
00056-00109	Battery charger DC 30A 180-240VAC Li-PO4 AND. 80A														S1	S1			
00056-00087	Battery charger 24V 30A 115-240V 50/60HZ (CURVA LIFE)																S1	S1	S1

S1 = Standard 1 piece S2 = Standard 2 pieces

Comfort Duotech | 3 in 1

Sweeps I Washes I Dries

HOW DOES DUOTECH WORK?

The collection, suction, and cleaning solution system is the true heart of the Comfort Duotech.
The solution is atomized uniformly by variable-flow nozzles adjacent to the washing roller. The exhaust air from the two suction motors is channeled and blown through dedicated side diffusers.
The counterclockwise rotation of the roller, together with the diffusers, allows for a smaller amount of solution to be maintained for longer, resulting in a superior wash that is also much more economical and faster than traditional methods.
The Comfort Duotech's perfect drying performance when cornering is also achieved thanks to the automatic movement of the wiper and side brushes during cornering.
The Comfort Duotech's solution consumption per minute ranges from 500ml to 1500ml (for heavy dirt concentrations), compared to 1500-4500ml per minute for competing machines.

This innovation allows for reduced water and detergent consumption, equivalent to 50% less than traditional roller brush systems, which require multiple ducts to distribute the solution along the entire length of the brush, resulting in dispersion and high consumption.
The innovative, patented AIR RECOVERY principle achieves this by recovering the airflow from the suction motors, which is then conveyed and compressed to the right and left sides in front of the central brush. Thus, using just two nozzles that deliver a calibrated amount of solution, the solution can be distributed across the entire width of the brush and maintained at a constant level in front of the brush.
The compressed air helps prevent lateral dispersion of the water/detergent solution.

Debris are lifted and conveyed into the perforated drawer. Unlike other roller scrubber-dryers, the central roller, rotating very quickly (approximately 950 rpm), also lifts the dirty water; This water does not return to the floor but flows into a tank containing a small helical brush. This brush directs the muddy water to the center, where the suction hose is located.

EVO sucks 85% of the water directly from the central brush. The rear wiper serves only to finish drying the remaining 15% of the water remaining on the floor.
EVO allows easy access to all its components for any maintenance.
The tanks can be easily tilted for washing and sanitizing.

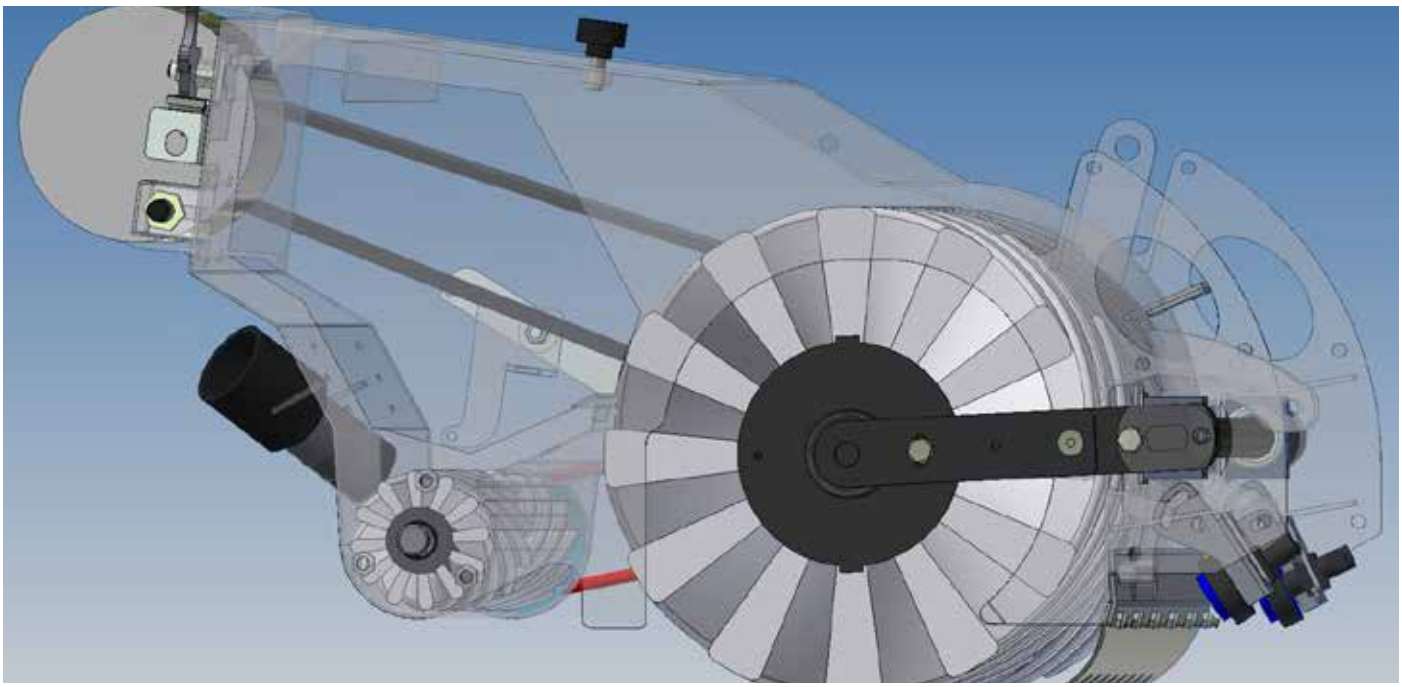

Comfort Duotech

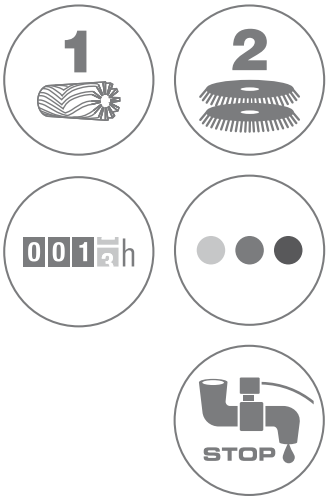

MORE INFO

CHARACTERISTICS

• **Comfort Duotech it is a 3 in 1 machine: it sweeps, washes, and dries** • Ultra compact dimensions and great handling like a walk behind scrubber dryer, ideal for maintenance cleaning • Complete right/left side brush (1060 mm working width) • Great battery autonomy thanks to the very low consumption of washing solution and tanks large capacity • Very precise detergent dosing system, proportional to the water supply, which determines a reduced number of stops and maximum use of the battery charge for the effective operation of the machine • Ergonomic steering wheel of new conception with very small turning radius (860mm) which allows it to rotate practically on itself both to the right and to the left • Self-leveling central brush that allows perfect work even on uneven surfaces • Forced air flows keep the solution always within the washing track patended • Sweeping, up to 1060mm, thanks to large diameter and intelligent side brushes (Active) which retract automatically both in the event of an impact and when cornering to allow the perfect collection of all the material. • Up to 30 L solid debris tank • Double floor drying process that allows the rear wheels to travel without slipping on wet surfaces. • Green feature: very low water consumption • Seat hight kit available • **Raised seat kit standard (only code 37025-00010)**

TECHNICAL DATA

	Comfort Duotech 85 CS	Comfort Duotech 85 CS RS
code	37025-00004	37025-00010
power supply	24V	24V
cleaning width with right side brush	880 mm	880 mm
cleaning width with two side brushes	1060 mm	1060 mm
scrubbing width/squeegee width	850/900 mm	850/900 mm
max working capacity	6160 m²/h	6160 m²/h
turning radius	860 mm	860 mm
clean water tank capacity	75 l/19,8 gal	75 l/19,8 gal
dirty water tank capacity	80 l/21,1 gal	80 l/21,1 gal
chemical tank capacity	3 l/0,79 gal	3 l/0,79 gal
solid waste container capacity	30 l/7,92 gal	30 l/7,92 gal
working speed/max	4/5,5 km/h	4/5,5 km/h
max gradient/power	12%/2800W	12%/2800W
main brush size	Ø300 x L 850 mm	Ø300 x L 850 mm
main brush speed	900 RPM/min	900 RPM/min
main brush pressure	adjustable from the control panel	adjustable from the control panel
dimension (cm)/weight	140x105x130/374 kg	140x105x130/374 kg

PLUS

Control panel with easy and intuitive controls featuring: hour meter, battery charge level indicator, empty tank light and forward/reverse drive indicator. Speed adjustment, horn, main brush pressure adjustment, automatic squeegee height adjustment. Detergent dosing system.

Sturdy and large central brush d.300 self-levelling, with adjustable pressure and anti-clockwise rotation. Stainless steel brush assembly. Innovative AIR RECOVERY system (patented), thanks to compressed air channelled in front of the brush: the lateral dispersion of the detergent solution is avoided.

Sturdy steel squeegee system. Perfect drying even in the tightest corners.

Wide stainless steel 30 l collector tank it allows collecting solid debris.

STANDARD EQUIPMENT

• 00080-04645 Main brush PPL/Tynex Duotech 85	• 2 x 00080-04646 PPL side brush dx/sx	• 00005-02341 Front squeegee blade Duotech 85 LINATEX®/AIROFLEX	• 00005-02340 Rear squeegee blade Duotech 85 LINATEX	

OPTIONAL

Only for model 37025-00004 • 4x00055-00120-Battery box Pb-Acid 6V 240Ah C5 +00071-05303 metal box for battery	• 00056-00067 Battery Charger 24V 30A 115-240/50-60 + 10002-08044 Connection cable batteries SB50-SB80	**Only for model 37025-00010** • 1x00055-00085 Battery box Pb-Acid 24V 320Ah C5 • 1x00055-00086 Battery box Pb-Acid 24V 360Ah C5*	• 1x00055-00087-GEL Battery box 24V 320Ah C5 GEL*	• 00056-00069 Battery charger 24V-60A 230V 50-60 Hz suggested for 360-320Ah battery models
• 00080-04650 Main brush PPL Duotech 85	• 00056-00069 Battery charger 24V-60A 230V 50-60 Hz suggested for 360-320Ah battery models	• 10001-10901 Automatic battery 240Ah topping up set • 10001-10902 Automatic battery 320/360Ah topping up set	• On Board Battery Charger 24V 20-35AH (on request)	• Front working light system (on request)
• 00072-00390 Seat belt	• Complete red Roll Bar model 85 (on request)	• Complete red Roll Bar with sheet metal shed model 85 (on request)	• 10001-10903 raised seat kit in conjunction with 00055-00086* or 00055-00087*	

Fms

Fleet Management System

Lavor's **Fleet Management System** allows having your entire fleet of floor scrubbers and sweepers in a cloud on the Web or mobile. **FMS** shows the current status of your fleet by providing all useful, real-time data on the operator's driving status and machines' condition. A simple and intuitive dashboard shows all the information needed to measure machine efficiency and productivity:

Battery monitoring

You can view the progress of battery charging and discharging. In models equipped with a current sensor, the AH delivered power consumption can be displayed.

Work area: management of business areas

You can know the location, status and activities of the machines in real time while setting the work areas. The configuration of areas is totally customizable; in fact, a work area of any shape and size can be drawn on the map, outside of which the machine may reduce its functions.

Mobile app for real-time monitoring

A service (for consultation purposes only, for now) allows users to display the portal homepage, machine section, alarm section and map section. In addition, the **Fleet Management System** comes along with a primary appraisal that will certify the system for the purchaser, detailing the system itself.

THE TECHNOLOGIES INCLUDED OFFER MULTIPLE BENEFITS

- Increased productivity through shorter set-up times, reduced errors and downtime
- Improved quality of operation and maintenance
- Increased product competitiveness due to IOT-derived advanced features.

FLOOR SCRUBBER DRIERS FMS RANGE

37031-00103	FREE EVO 50BT with batteries charger - FMS
on request	MOVING 55BT with batteries charger - FMS
37010-00048	COMFORT XXS 66 with batteries charger / with batteries - FMS
37010-00093	COMFORT XXS 66 UP Li with battery charger - FMS
37006-00098	COMFORT XS-R1 75 UP with batteries charger - FMS
37006-00101	COMFORT XS-R1 85 UP with batteries charger - FMS
37007-00031	COMFORT S-R 100 UP - FMS
37009-00034	COMFORT M 102 - FMS
37025-00008	DUOTECH 85 CS - FMS

Is it better a petrol engine driven or a battery powered model?

The use of a petrol engine implies the presence of exhaust gasses and therefore the machine must be used only in outside areas or in areas where the operator is not exposed at such risk. The battery models can be used also inside. From the technical and qualitative point of view the sweepers do exactly the same cleaning task, but the petrol engine machine can work nonstop (it is only necessary to fill up the tank with petrol), while the electric models, once the battery is empty, need to be re-charged (an average of 8-10 hours of charge, if battery is completely worn-out)

How should the brush be?

In the sweepers, there are two types of bushes: the first one rotates with a perpendicular axle to the floor (this is the one called "side brush"), it is useful to move dirt into the collecting area and to reach dirt near borders or under edges; the second one rotates with a parallel axle to the floor (this is the one called "main brush"); it rotates counterclockwise (opposite) to the forward direction of machine and collects dirt into the collection tank. The brushes differ in the shape (round flat the "side brush" and cylindrical the "main brush"), in the type of bristles (the way bristles are arranged on the brush body), in the body material (that accordingly to options, provides resistance still in humid enviroment or competitive construction) and in the bristle material/diameter/shape.
Generally, the stiffer and rougher the bristles are, the better they collect the heaviest dirt adherent to the floor (typically wet leaves). The more flexible and thinner the bristles are, the better they collect light and thin dirt . To have a better scraping action, it is necessary to add steel bristle to the PP ones. To collect very thin dirt, it is necessary to use only short round PP bristles. As a consequence of motorization (petrol engine or electric one) and so of indoor or outdoor use, the walk behind models have stiffer or softer bristles, to adapt in best way possible to the type of dirt typically found in the working area.

How long do battery charges last?

It is impossible to determine exactly how long a battery charge lasts.
Battery autonomy changes depending on type of surface, dirt quantity, brush type and way in which traction system is used (speed and slope).
Battery life is made up of number of charge cycles (also incomplete), if use conditions, charge and service are perfectly observed.
Manufacturing technology diversifies numbers of cycles, service needed, use/charge conditions and performances.

Which kind of battery technology?

Batteries have different prices and so it is important to know their features in order to choose the best one as far as the operator's needs or habits are concerned.
They divide into two families according to the necessity of recurrent acid solution refilling.
Acid lead batteries (Pb-Acid), need refilling, because during the charge cycle a lot of gasses are generated (for this reason a specific and aired room is necessary for safe working) and the solution vaporizes: it is necessary to add distilled water before the submerged lead parts that are no more covered with water begin to oxidize (compromised efficiency).
VRLA batteries (Valve Regulated Lead Acid) are airtight, this means that gasses generated during the charge cycle are rearranged inside the battery: refilling is not necessary, it is possible to charge them in any room and they can be carried without risk.
Acid lead batteries divide themselves into categories depending on the thickness of plate they are built of: if the plate is plane, the resistance to discharge is lower and few charge cycles are necessary, if the plate is tubular (or armed, recognizable opening the battery cap and verifying that the plate is made up of a lot of cylinders side by side instead of a thin leaf sheet) there is a higher resistance to discharge and to charge cycles.
VRLA batteries divide themselves depending on the condition (liquid or gel) of the acid solution (that enables energy exchange) and on the way it is kept inside the

- **Belt drive**

The circular section grants a high resistance, stillness, reliability and it doesnt need service.

- **Side brush exclusion**

It is a system protecting bristles during machine stop or whenever it is not necessary to use it.

- **Dust vacuum system**

It can be found in the main brush area. Together with the mechanical action, it conveys waste and dust that are collected into the tank through the right filters supplied.

- **Front dust vacuum system**

As well as traditional vacuum system, a vacuum system can be found in the lateral brush/es collection area. Dust dispersion outside the machine is limited also before the main collection area is reached.

- **Flap raise system**

The main brush collection area is delimited by protections (flaps) touching the ground, better vacuum effect. Whith a big residual is possible to raise the flap collecting it rather than keep going pushing it on the floor

- **Filter shaker**

It clears filter from dust without touching it or opening the sweeper; the vacuum efficiency is kept at max, granting the best comfort and output for the user.

- **Lithium batteries as standard**

They provide more power, longer life and much faster charging times.
They are not affected by the memory effect and are lighter in weight with lower maintenance costs.

- **Sanitize system**

Through the action of the nozzles, the sanitizing product is evenly distributed over the surface after the drying system has passed over by reducing the battery charge.

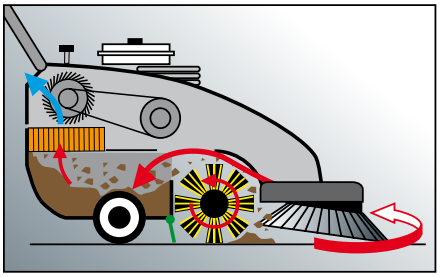

battery: if it is liquid and kept by a spongy and filamentous material, the battery is called AGM; if it is a gel solution inside a membrane, the battery is called GEL battery. On the market there are a lot of products completely different in features and value and it is very important to know the manufacturing details to couple the right battery charger (it is not sure that any battery charger is suited and get a better result than the ones in our range that are specific for our batteries) and to come up to the working expectations.

Nomenclature

Model

SWL 700 ST/ET

E = ELECTRIC

S = ENGINE MOTOR

Brush width

Technical information

Code	Model	Page	Type	Traction	Main brush width	Main brush + 1 side brush	Main brush + 2 side brushes	Collector tank	Max working capacity	Packaging	Weight with packaging	Weight with packaging	Pcs x pallet
					mm/inc	mm/inc	mm/inc	lt/gal	m²/foot²	L x l x H cm/inc	kg	lbs	n°
39003-00001	BSW 375 ET	288	electric	Manual	350/13,78	-	375/14,76	2/0,52	1000/10764	30x36x11/11x13x4	2,8	6,16	48
39001-00029	BSW 950 MF	290	manual	Manual	480/18,89	-	950/37,40	45/11,8	3800/40903	120x80x168/47,2x31x66	29	64	4
39002-00069	SWL 700 ET	292	electric	Mechanical	510/20,08	680/26,77	-	45/11,89	2620/28201	126x63x85/50x25x34	78	172	1
39002-00070	SWL 700 ST	292	gasoline motor	Mechanical	510/20,08	680/26,77	-	45/11,89	2620/28201	126x63x85/50x25x34	77	169	1
39002-00136	SWL 700 COURT DELUXE	294	electric	Mechanical	510/20,08	680/26,77	-	45/11,89	2620/28201	126x63x85/50x25x34	78	172	1
39002-00071	SWL 900 ET	296	electric	Mechanical	710/27,95	880/34,64	-	55/14,52	3700/39826	126x83x85/50x33x34	89	196	1
39002-00072	SWL 900 ST	296	gasoline motor	Mechanical	710/27,95	880/34,64	-	55/14,52	3700/39826	126x83x85/50x33x34	97	213	1
39002-00067	SWL R 950 ET	298	electric	Mechanical	450/17,7	750/29,5	1050/41,3	50/13,2	6000/64583	148x86x120/58x33x47	225	496	1
39002-00142	SWL R 850 EVO	300	electric	Mechanical	650/25,5	850/33,4	1050/41,3	55/14,52	4900/52743	-	262	577	1
39002-00064	SWL R 990 ET	302	electric	hydraulic	700/27,56	920/36,22	1140/44,8	62/16,38	6200/66735	143x91x114/56x36x45	260	572	1
39002-00065	SWL R 990 ST	302	gasoline motor	hydraulic	700/27,56	920/36,22	1140/44,8	62/16,38	8280/89124	143x91x114/56x36x45	300	660	1
39002-00074	SWL R 1000 ET	304	electric	hydraulic	700/27,56	920/36,22	1230/48,42	62/16,38	6200/66735	143x91x114/56x36x45	260	572	1
39002-00075	SWL R 1000 ST	304	gasoline motor	hydraulic	700/27,56	920/36,22	1230/48,42	62/16,38	8280/89124	143x91x114/56x36x45	300	660	1
39002-00036	SWL R 1100 ET	306	electric	hydraulic	800/31,50	1050/41,34	1300/51,18	115/30	9700/104409	160x101x130/65x43x52	375	825	1

Code	Model	Page	Type	Traction	Main brush width	Main brush + 1 side brush	Main brush + 2 side brushes	Collector tank	Max working capacity	Packaging	Weight with packaging	Weight with packaging	Pcs x pallet
					mm/inc	mm/inc	mm/inc	lt/gal	m²/foot²	L x l x H cm/inc	kg	lbs	n°
39002-00033	SWL R 1100 DT	306	Diesel motor	hydraulic	800/31,50	1050/41,34	1300/51,18	115/30	9700/104409	160x101x130/65x43x52	434	955	1
39002-00044	SWL R 1100 ST	306	gasoline motor	hydraulic	800/31,50	1050/41,34	1300/51,18	115/30	9700/104409	160x101x130/65x43x52	434	955	1
39002-00043	SWL R 1100 ET BINUP	308	electric	hydraulic	800/31,50	1050/41,34	1300/51,18	115/30	9700/104409	160x101x130/65x43x52	375	825	1
39002-00041	SWL R 1100 DT BINUP	308	Diesel motor	hydraulic	800/31,50	1050/41,34	1300/51,18	115/30	9700/104409	160x101x130/65x43x52	434	955	1
39002-00045	SWL R 1100 ST BINUP	308	gasoline motor	hydraulic	800/31,50	1050/41,34	1300/51,18	115/30	9700/104409	160x101x130/65x43x52	434	955	1
39002-00113	SWL R 1200 ET BINUP	310	electric	electric	900/35,4	1150/45,2	1440/56,6	180/47,5	11500/ 37729	1935x134x168/76x53x66	750	1653	1
39002-00114	SWL R 1200 DT BINUP	310	Diesel motor	electric	900/35,4	1150/45,2	1440/56,6	180/47,5	11500/ 37729	1935x134x168/76x53x66	870	1918	1
39002-00066	SWL R 1300 DT BINUP	312	Diesel motor	hydraulic	1000/39,3	1485/58,4	-	490/129	19200/ 206667	225x145x154/88x57x60	1020	2245	1
39002-00128	SWL R 1300 DT BINUP	312	Diesel motor	hydraulic	1000/39,3	1485/58,4	1615/63,5	490/129	19200/ 206667	225x145x154/88x57x60	1020	2245	1
39002-00105	SWL R 1300 DT BINUP	314	Diesel motor	hydraulic	1000/39,3	1485/58,4	-	490/129	19200/ 206667	225x145x154/88x57x60	1020	2245	1
on request	SWL R 1300 DT BINUP	314	Diesel motor	hydraulic	1000/39,3	1485/58,4	1615/63,5	490/129	19200/ 206667	225x145x154/88x57x60	1020	2245	1
39002-00106	SWL R 1300 DT BINUP	316	Diesel motor	hydraulic	1000/39,3	1485/58,4	-	490/129	19200/ 206667	225x145x154/88x57x60	1020	2245	1
on request	SWL R 1300 DT BINUP	316	Diesel motor	hydraulic	1000/39,3	1485/58,4	1615/63,5	490/129	19200/ 206667	225x145x154/88x57x60	1020	2245	1
39002-00111	SWL R 1300 DT AC BINUP	316	Diesel motor	hydraulic	1000/39,3	1485/58,4	-	490/129	19200/ 206667	225x145x154/88x57x60	1020	2245	1
on request	SWL R 1300 DT AC BINUP	316	Diesel motor	hydraulic	1000/39,3	1485/58,4	1615/63,5	490/129	19200/ 206667	225x145x154/88x57x60	1020	2245	1

BSW 375 ET

Space-saving storage position.

MORE INFO

CHARACTERISTICS

• Industrial battery-powered sweeper for the quick, quiet and cordless intermediate cleaning of all surfaces, indoor and outdoor. • Ideal for entryways of all kinds, hallways, staircases, driveways, warehouse and office areas, airports and train stations. • Equipped with two batteries, the operation time lengthens to 90 minutes. • The powerful Lithium-Ion battery (without memory effect) with 10.8 V and 1.5 Ah allows an operation time of approx. 45 minutes per battery. • Second battery can be directly stored and carried on the machine itself. • Quick-charging unit with a charging time of only 70 minutes is included with purchase. • Large foot pedal for activation without bending over. • Main cylinder brush and side brushes can be replaced without tools. • Aluminum telescopic handle for an optimum work position. • Traceless wheels. • Enormous waste collection tray with 2 liter capacity. • Changeable bristled rim on the underside of the housing. • Low noise volume, and therefore excellent for use during business hours. • Compact, light, and easy-to-handle for any user.

TECHNICAL DATA

	BSW 375 ET
code	39003-00001
main brush + 2 side brush width	375mm/14,76 inc
collector tank	2 lt/0,52 gal
max working capacity	1000 m^2/h-10764 ft^2/h
operating voltage	10,8V/1,5 Ah
max. power	25 W
voltage (charging unit)	230 V~50 Hz
dimension (cm)/weight	30x36x70/2,8 kg

PLUS

Main cylinder brush and side brushes can be replaced without tools. Traceless wheels.

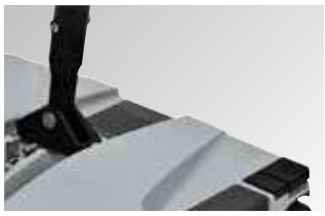

Enormous waste collection tray with 2 liter capacity. Easy to remove. Large foot pedal for activation without bending over.

Quick-charging unit with a charging time of only 70 minutes is included with purchase.

Equipped with two batteries, the operation time lengthens to 90 minutes. Second battery can be directly stored and carried on the machine itself.

STANDARD EQUIPMENT

• 00080-04148 Cylinder brush	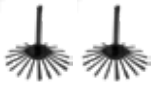 • 2x 00080-04149 Side brush l/r	• 2 x 00055-00129 10.8V Lithium-Ion battery	• 00056-00096 Battery charger	

BSW 950 MF

MORE INFO

CHARACTERISTICS

• Ideal for small and medium surfaces • Easy handling • Wide collector tank with Filtering system • Rear collector tank with filter • Side brush lifting • Main brush pressure regulation • Separate side brush • Adjustable working load on the brush • Tilting handle • 360° front wheel • Shock proof frame • Hourly efficiency (max) 3800 m2/h. • Working area (2 side brush) 480 (950) mm • Cartridge filter with fan for dust extraction

TECHNICAL DATA

	BSW 950 MF
code	39001-00029
main brush width	480 mm / 18,90 inch
main brush + 2 side brushes	950 mm / 37,40 inch
collector tank	45 lt./ 11,88 gal
max working capacity	3800 m^2/h / 37673 ft^2/h
traction	manual
brushes transmission	elastic belt
pressure on the brushes	adjustable
side brush	lifting arm system
dust-laying system	direct
filtering system	pleated figer
dimension (cm)/weight	97x93x128 / 29kg

PLUS

Main brush with pressure regulation. Side brush lifting with pressure regulation system.

Wide collector tank with pleated filtering system. Rear collector tank with cartridge filter with fan for dust extraction

360° front wheel and heavy-duty shock proof frame

Tilting handle with sturdy storage bag

STANDARD EQUIPMENT

• 00080-04150 PP	• 00080-04151 PP	• 00070-00451 Tank filter	• 10001-07853 Cartridge filter with fan for dust extraction standard	

OPTIONAL

• 00080-05326 left brush for asphalt	• 00080-05325 right brush for asphalt			

SWL 700

MORE INFO
SWL 700 ST

MORE INFO
SWL 700 ET

CHARACTERISTICS

• Ideal for medium and large surfaces • Large filter surface with electric filter shaker (ET model) • Manual filter shaker (ST model) • Side brush raising control • Suction switch off • Flap raise system • Panel filter in horizontal position • Main brush pressure regulation • Indirect back collection • Quick main brush release • Long life elastic belts • Reclining handle • Suction selection lever. • Traction lever. • Antistatic device. • Wide collector tank • Heavy duty steel frame • Side brush mechanical engagement • Battery and battery charger not included.

TECHNICAL DATA

	SWL 700 ET	SWL 700 ST
code	39002-00069	39002-00070
main brush width	510mm / 20,08 inc	510mm / 20,08 inc
main brush + 1 side brush width	680mm / 26,77 inc	680mm / 26,77 inc
collector tank	45 lt / 11,89 gal	45 lt / 11,89 gal
max working capacity	2620 m^2/h-28201 ft^2/h	2620 m^2/h-28201 ft^2/h
traction	mechanical	mechanical
max speed	4 km/h-2,49 mile/h	4 km/h-2,49 mile/h
motor type / power	12V / 400W	Honda 4,6 HP / 3,4 kW GC160
filtering surface	2 m^2 / 21,53 ft^2	2 m^2 / 21,53 ft^2
pressure on the brushes	adjustable	adjustable
filter shaker	electric	manual
dimension (cm)/weight	126x63x85 / 78kg	126x63x85 / 86kg

PLUS

Large filter surface with electric filter shaker (ET model), manual filter shaker (ST model)

Side brush raising control. Main brush pressure regulation and quick main brush release

Heavy duty steel frame with 360° front wheel and long life elastic belts

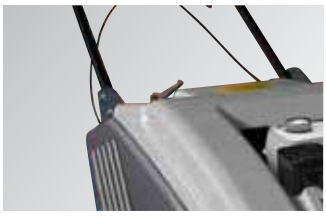

Control panel with: side brush raising control, suction swith off, flap raise system, battery level (ET model), on/ff key (ET model)

STANDARD EQUIPMENT

• 00080-04127 PP SWL 700 ET • 00080-04130 PP-Mixed steel SWL 700 ST	• 00080-04124 PP	• 00070-00427 paper filter 14 µm		

OPTIONAL

• 00039-01771 Side brush protection	• 00070-00431 PE panel filter 5µm	• 00070-00433 HEPA panel filter	• 10001-07818 Trolley for collector tank set	model ET: • 00055-00149 Tubular battery pb-acid - 12V 118Ah C5
model ET: • 00055-00130 GEL Battery 12 MFP 105 - 12V 105Ah C5	model ET: • 00056-00068 Battery charger 12V-13A 100-240V 50-60 Hz	• 00030-04141side brush mixed steel		

SWL 700 Court Deluxe

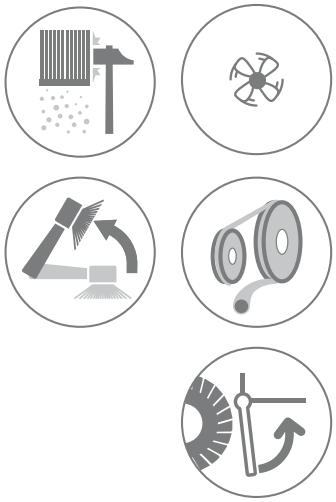

MORE INFO

CHARACTERISTICS

• Ideal for medium and large areas • Large filtering area with electric filter shaker • Side-brush lifting lever • Suction shut-off switch • Flap lifting system • Panel filter in horizontal position • Central brush pressure adjustment system • Indirect rear collection • Main brush quick release • Long-lasting elastic straps • Tilting handle • Suction selection lever. • Traction lever. • Antistatic device. • Special collection container with microholes for the collection and redistribution of sand on padel and tennis courts • Standard collection container without holes • Self-supporting steel frame • Mechanically-operated side brush • Battery and battery charger included • Non-marking side flaps • Main brush with soft bristles

TECHNICAL DATA

	SWL 700 ET Court Deluxe
code	39002-00136
main brush width	510mm / 20,08 inc
main brush + 1 side brush width	680mm / 26,77 inc
collector tank	45 lt / 11,89 gal
max working capacity	2620 m^2/h-28201 ft^2/h
traction	mechanical
max speed	4 km/h-2,49 mile/h
motor type / power	12V / 400W
filtering surface	2 m^2 / 21,53 ft^2
pressure on the brushes	adjustable
filter shaker	electric
dimension (cm)/weight	126x63x85 / 78kg

PLUS

Equipped with a 510mm wide central brush for sweeping up coarse dirt and troublesome ball fluff. Thanks to its soft bristles, it restores the synthetic turf to pristine condition.

It features a collection tank with microholes for redistributing sand and retaining coarse dirt restoring the court to its original condition.

Battery-powered it can be used without any problems in both indoor and outdoor facilities.

Ready to use. SWL 700 ET COURT DELUXE is equipped with standard low maintenance gel battery and on-board charger

STANDARD EQUIPMENT

• 00080-05196 main brush with soft bristles	• 00080-04124 PP	• 00070-00427 paper filter 14 µm	• 00056-00088 battery charger 12v 13a 220-240/ 50-60	• 00055-00130 12v 105ah c5 gel battery - low maintenance
• 00005-02532 non-marking side flap	• 10001-13995 closed collection tray without microholes	• 00054-01632 collection tray with microholes		

OPTIONAL

• 00039-01771 Side brush protection	• 00070-00431 PE panel filter 5µm	• 00070-00433 HEPA panel filter	• 10001-07818 Trolley for collector tank set	• 00055-00149 Tubular battery pb-acid - 12V 118Ah C5
• 00055-00130 GEL Battery 12 MFP 105 - 12V 105Ah C5	• 00056-00068 Battery charger 12V-13A 100-240V 50-60 Hz	• 00042-04629 brush protection with wheels	• 00080-04141 side brush mixed steel	

SWL 900

MORE INFO
SWL 900 ST

MORE INFO
SWL 900 ET

CHARACTERISTICS

• Ideal for medium and large surfaces • Large filter surface with electric filter shaker (ET model) • Manual filter shaker (ST model) • Side brush raising control • Suction switch off • Flap raise system • Panel filter in horizontal position • Main brush pressure regulation • Indirect back collection • Quick main brush release • Long life elastic belts • Reclining handle • Suction selection lever • Traction lever • Antistatic device • Wide collector tank • Heavy duty steel frame • Side brush mechanical engagement • Battery and battery charger not included.

TECHNICAL DATA

	SWL 900 ET	SWL 900 ST
code	39002-00071	39002-00072
main brush width	710mm / 27,95 inc	710mm / 27,95 inc
main brush + 1 side brush width	880mm / 34,64 inc	880mm / 34,64 inc
collector tank	55 lt / 14,53 gal	55 lt / 14,53 gal
max working capacity	3700m²/h-39826 ft²/h	3700m²/h-39826 ft²/h
traction	mechanical	mechanical
max speed	4 km/h-2,49mile/h	4 km/h-2,49mile/h
motor type / power	12V / 400W	Honda 4,6 HP / 3,4 kW GC160
filtering surface	3,02 m² / 32,50 ft²	3,02 m² / 32,50 ft²
pressure on the brushes	adjustable	adjustable
filter shaker	electric	manual
dimension (cm)/weight	126x83x85 / 89 kg	126x83x85 / 97 kg

PLUS

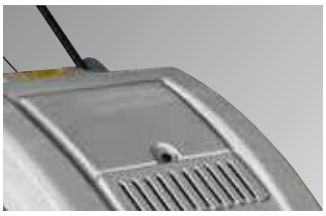

Large filter surface with electric filter shaker (ET model), manual filter shaker (ST model)

Side brush raising control. Main brush pressure regulation and quick main brush release

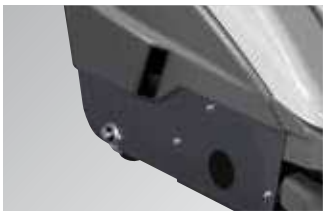

Heavy duty steel frame with 360° front wheel and long life elastic belts

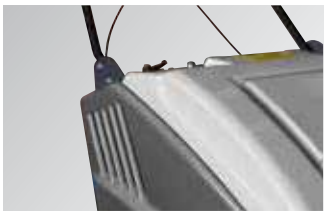

Control panel with: side brush raising control, suction swith off, flap raise system, battery level (ET model), on/off key (ET model)

STANDARD EQUIPMENT

• 00080-04128 PP SWL 900 ET • 00080-04131 PP-Mixed steel SWL 900 ST	• 00080-04124 PP	• 00070-00428 paper filter 14 µm		

OPTIONAL

• 00039-01771 Side brush protection	• 00070-00432 PE panel filter 5µm	• 00070-00434 HEPA panel filter	• 10001-07818 Trolley for collector tank set	model ET: • 00055-00149 Tubular battery pb-acid - 12V 118Ah C5
model ET: • 00055-00130 GEL Battery 12 MFP 105 - 12V 105Ah C5	model ET: • 00056-00068 Battery charger 12V-13A 100-240V 50-60 Hz	• 00080-04141 side brush mixed steel		

SWL R 950 ET

MORE INFO

CHARACTERISTICS

• Ideal for medium and large surfaces • Foot pedal brake • Parking brake • Brush electric control • Reverse lighting and acoustic warning • Water system for dust reduction with rear tank • Charge meter • Hour meter • Large filter surface with electric filter shaker • Horizontal cartridge filter • Main brush pressure adjustment • Rear indirect collection tank • Main brush quick release • Long life elastic belts • Heavy duty steel frame • Motorized side brushes • LED headlight • Battery and battery charger not included.

TECHNICAL DATA

	SWL R 950 ET
code	39002-00067
main brush width	500mm / 16,4 inc
main brush + 1 side brush width	750mm / 29,5 inc
main brush + 2 side brushes	1050 mm / 41,3 inc
collector tank	50 lt / 13,2 gal
max working capacity	6000m²/h-64583,3 ft²/h
max speed/traction	12 km/h-7,4mile/h / mechanical
motor type / power	48V (4x12V)/800W
filtering surface	1,5 m² / 16,1 ft²
pressure on the brushes	side 2x120 N/central 250 N
filter shaker	electric
dimension (cm)/weight	80x135x110 /225 kg

PLUS

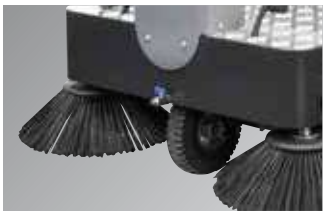

Front water system for dust reduction with 2lt rear tank

Front working LED light system

Heavy duty steel frame with main brush pressure adjustment and quick release

Reverse lighting and acoustic warning system

STANDARD EQUIPMENT

• 00080-04153 PP brush	• 00080-04152 2x PP side brush	• 00070-00452 Cartridge filter 5 µm		

OPTIONAL

• 00056-00071 Battery charger model 230V/50-60 Hz	• 4x 00055-00112 battery GEL 12V 58 Ah C20	• 00080-04755 1x mixed steel side brush		

SWL R 850 EVO

MORE INFO

CHARACTERISTICS

• Ideal for small and medium surfaces • Electromagnetic parking brake on front wheel • Electric control of central brush • Electronic control panel with battery charge status indicator and hour meter • Large filtering surface with electric filter shaker • Polyester cartridge filters • Rear indirect collection tank • Quick release of central brush • Resistant steel frame • Motorized side brushes • Reversing buzzer • Battery and battery charger not included • 2 PP side brushes • Front work light

TECHNICAL DATA

	SWL R 850 EVO
code	39002-00142
main brush width	650mm / 25,5 inc
main brush + 1 side brush width	850mm / 33,4 inc
main brush + 2 side brushes	1050 mm / 41,3 inc
collector tank	55 lt / 14,5 gal
max working capacity	4900m²/h-52743,16 ft²/h
motor type / power	24V/1570W
filtering surface	4 m² / 43 ft²
filter shaker	electric
dimension (cm)/weight	123x79,5x115,8 / 262 Kg

PLUS

Complete right/left side brush with brush raising control system

New ergonomic control panel

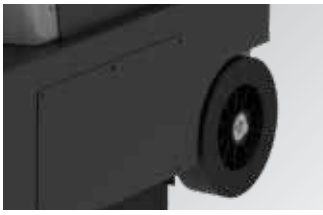

Heavy duty steel frame with main brush pressure adjustment and quick release

The ergonomic and comfortable shape of the machine allows the operator to work effortless for a long time, improving productivity.

STANDARD EQUIPMENT

• 00080-04129 PP brush	• 2 X 00080-04125 PP Side brushes	• 5 X 00070-00217 Polyester cartridge filter		

OPTIONAL

• 00055-00149 2 X battery 12V 157Ah c20 - 118Ah c5	• 00055-00130 2 X battery Gel 12V 105A/C5-120A /C20	• 00056-00067 battery charger 24V 30Ah 80A red	• 5 X 00070-00218 HEPA cartridge filter	• 00080-05371 Main brush PP/STEEL
• 00080-05372 Main brush TAMPICO				

SWL R 990

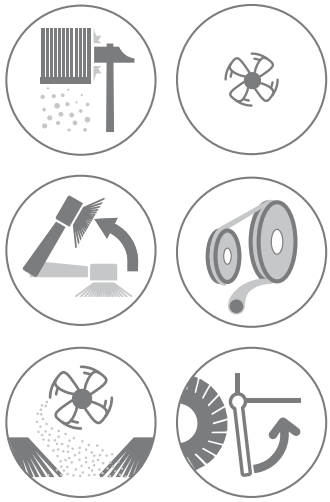

POWERED by HONDA™
Only model 990 ST

MORE INFO

CHARACTERISTICS

• Ideal for medium surfaces • Large filter surface distributed on 6 cartridge filters fitted with electric filter shaker • Side brush raising control • **Complete right/left side brush** • Suction switch off • Main brush pressure regulation • Indirect back collection • Quick changing of the main brush and side brush • Long life elastic belts • Suction selection lever • Antistatic device • Battery level indicator (ET model) • Wide collector tank • Heavy duty steel frame • Perfectly balanced weight of the components, thus resulting in totally safe quick changes of direction • Battery and battery charger not included.

TECHNICAL DATA

	SWL R 990 ET	SWL R 990 ST
code	39002-00064	39002-00065
main brush width	700mm / 27,5 inc	700mm / 27,5 inc
main brush + 1 side brush	920mm / 36,2 inc	920mm / 36,2 inc
main brush + 2 side brushes	1140 mm / 44,8 inc	1140 mm / 44,8 inc
collector tank	62 lt / 16,3 gal	62 lt / 16,3 gal
max working capacity	6200m²/h-66736 ft²/h	7700m²/h-82882 ft²/h
traction/ limiting gradient	rear/12%	front/14%
max speed	6,1 km/h-3,7mile/h	7,6 km/h-4,7mile/h
motor type / power	24V / 1150W	Honda 4,8 HP / 3,6 kW GX160
filtering surface	6 m² / 64,5 ft²	6 m² / 64,5 ft²
filter shaker	electric	electric
dimension (cm)/weight	143x91x114 / 256 kg	143x91x114 / 288 kg

PLUS

Complete right/left side brush with brush raising control system

Heavy duty steel frame and wide collector tank. Perfectly balanced weight of the components, thus resulting in totally safe quick changes of direction

Panel control with: suction switch off system, battery level indicator (ET model) and on/off key

Large filter surface distributed on 6 cartridge filters fitted with electric filter shaker

STANDARD EQUIPMENT

• 00080-04142 PP SWL R 990 ET • 00080-04133 PP-Mixed steel SWL R 990 ST	• 2 x 00080-04126 PP SWL R 990 ET • 2 x 00080-04136 PP-Mixed steel SWL R 990 ST	• 6 x 00070-00430 paper filter 14 µm		

OPTIONAL

• 10001-07819 Anti-trace wheels	• 00070-00436 polyester filter • 00070-00437 Hepa filter	• 00054-01367 Steel collector tank	• 00039-01772 Right brush protection	• 00039-01769 Left brush protection
• 00072-00508 overhead guard	model ET: • 4 x 00055-00013 tubular battery pb-acid 6V180Ah C5	model ET: • 4 x 00055-00142 GEL Battery 6 MFP 180-6V 180Ah C5	model ET: • 4 x 00055-00120 tubular battery pb-acid - 6V 250Ah C5	model ET: • 00056-00067 Battery Charger 24V 30A 115-240/50-60 + Connection cable battery charger RB50-RB80: cod 10002-08044 + Connection cable battery charger RB80-RB175: cod 10002-07866

SWL R 1000

POWERED by HONDA™

MORE INFO

CHARACTERISTICS

• Ideal for large surfaces • Large filter surface distributed on 6 cartridge filters fitted with electric filter shaker • Side brush raising control • **Complete right/left side brush** • Suction switch off • Flashing light • Main brush pressure regulation • Indirect back collection • Front dust vacuum system • Quick changing of the main brush and side brush without tools • Long life elastic belts • Suction selection lever • Antistatic device • Battery level indicator (ET model) • Wide collector tank • Heavy duty steel frame • Adjustable seat • Perfectly balanced weight of the components, thus resulting in totally safe quick changes of direction • Battery and battery charger not included. • Front light system **(optional on request)**, standard for models code 39002-00030/39002-00039

TECHNICAL DATA

	SWL R 1000 ET	SWL R 1000 ST	SWL R 1000 ET Light	SWL R 1000 ST Light
code	39002-00074	39002-00075	39002-00030	39002-00039
main brush width	700 mm / 27,56 inc	700 mm / 27,56 inc	700 mm / 27,56 inc	700 mm / 27,56 inc
main brush + 1 side brush	920 mm / 36,22 inc	920 mm / 36,22 inc	920 mm / 36,22 inc	920 mm / 36,22 inc
main brush + 2 side brushes	1150 mm / 45,28 inc	1150 mm / 45,28 inc	1150 mm / 45,28 inc	1150 mm / 45,28 inc
collector tank	62 lt / 16,3 gal	62 lt / 16,3 gal	62 lt / 16,3 gal	62 lt / 16,3 gal
max working capacity	6200 m^2/h-66736 ft^2/h	7700 m^2/h-82881 ft^2/h	6200 m^2/h-66736 ft^2/h	7700 m^2/h-82881 ft^2/h
traction / limiting gradient	rear wheels / 10%	front wheel / 17%	rear wheels / 10%	front wheel / 17%
max speed	5,8 km/h-3,60 mile/h	7,2 km/h-4,5 mile/h	5,8 km/h-3,60 mile/h	7,2 km/h-4,5 mile/h
motor type / power	24V / 1150W	Honda 4,8 HP / 3,6kW	24V / 1150W	Honda 4,8 HP / 3,6kW
filtering surface	6 m^2 / 64,6 ft^2	6 m^2 / 64,6 ft^2	6 m^2 / 64,6 ft^2	6 m^2 / 64,6 ft^2
filter shaker	electric	electric	electric	electric
dimension (cm)/weight	143x91x114/260kg	143x91x114/300kg	143x91x114/260kg	143x91x114/300kg

PLUS

Complete right/left side brush with brush raising control system

Heavy duty steel frame and wide collector tank. Perfectly balanced weight of the components, thus resulting in totally safe quick changes of direction

Panel control with: suction switch off system, battery level indicator (ET model) and on/off key. Flashing light

Large filter surface distributed on 6 cartridge filters fitted with electric filter shaker

Available models with limiting gradient 20%

- SWL R 1000 ET cod. 39002-00049
- SWL R 1000 ET Light cod. 39002-00050
- SWL R 1000 ST cod. 39002-00051
- SWL R 1000 ST Light cod. 39002-00052

STANDARD EQUIPMENT

• 00080-04142 PP SWL R 1000 ET • 00080-04133 PP-Mixed steel SWL R 1000 ST	• 2 x 00080-04126 PP SWL R 1000 ET • 2 x 00080-04136 PP-Mixed steel SWL R 1000 ST	• 6 x 00070-00430 paper filter 14 µm		

OPTIONAL

• 00070-00436 polyester filter • 00070-00437 Hepa filter	• 00054-01367 Steel collector tank	• 00039-01772 Right brush protection	• 00039-01769 Left brush protection	• 00072-00509 overhead guard
model ET: • 4 x 00055-00013 tubular battery pb-acid 6V180Ah C5	model ET: • 4 x 00055-00142 GEL Battery 6 MFP 180-6V 180Ah C5	model ET: • 4 x 00055-00107 GEL Battery - 6V 250Ah C5	model ET: • 00056-00067 Battery Charger 24V 30A 115-240/50-60 + Connection cable battery charger RB50-RB80: cod 10002-08044 + Connection cable battery charger RB80-RB175: cod 10002-07866	

SWL R 1100

POWERED by HONDA™

MORE INFO

CHARACTERISTICS

• Large filter surface distributed on 8 cartridge filters fitted with electric filter shaker. • Side brush raising control. • On request DSA unload device for tank emptying into dust containers up to 145 cm height. • **Complete right/left side brush**. • Suction switch off. • Flashing light. • Main brush pressure regulation. • Service and parking brake. • Hour meter and klaxon. • Front dust vacuum system. • Quick changing of the main brush and side brush without tools. • Long life elastic belts. • Suction selection lever. • Antistatic device. • Battery level indicator (mod.ET). • 115 lt wide collector tank. • Heavy duty steel frame. • Adjustable seat. • Battery and battery charger not included. • 24V - 1200W AC three-phase traction motor• **Front working light system.**

TECHNICAL DATA

	SWL R 1100 ET	SWL R 1100 DT	SWL R 1100 ST
code	39002-00036	39002-00033	39002-00044
main brush width	800mm / 31,50 inc	800mm / 31,50 inc	800mm / 31,50 inc
main brush + 1 side brush	1050mm / 41,34 inc	1050mm / 41,34 inc	1050mm / 41,34 inc
main brush + 2 side brushes	1300mm / 51,19 inc	1300mm / 51,19 inc	1300mm / 51,19 inc
collector tank	115 lt / 30,3 gal	115 lt / 30,3 gal	115 lt / 30,3 gal
max working capacity	9700 m^2/h-104409 ft^2/h	9700 m^2/h-104409 ft^2/h	9700 m^2/h-104409 ft^2/h
traction / limiting gradient	front wheels / 20%	front wheel / 10%	front wheel / 10%
max speed	7,5 km/h-4,66 mile/h	7,5 km/h-4,66 mile/h	7,5 km/h-4,66 mile/h
motor type / power	24V/2,67 kW	Diesel Yanmar 6,6 Hp/4,9 kW	Honda 4,8 Hp/3,6 kW
filtering surface	6,4 m^2 / 68,89 ft^2	6,4 m^2 / 68,89 ft^2	6,4 m^2 / 68,89 ft^2
filter shaker	electric	electric	electric
dimension (cm)/weight	160x101x130/375 kg	160x101x130/434 kg	160x101x130/434 kg

PLUS

Complete right/left side brush with brush raising control system

Heavy duty steel frame and wide collector tank. Perfectly balanced weight of the components, thus resulting in totally safe quick changes of direction

Panel control with: suction switch off system, battery level indicator (ET model), on/off key, hour meter and horn. Flashing light and front working light system

Large filter surface distributed on 8 cartridge filters fitted with electric filter shaker

Available models with limiting gradient 20%

- SWL R 1100 DT cod. 39002-00056
- SWL R 1100 ST cod. 39002-00058

On request model with overhead guard

STANDARD EQUIPMENT

• 00080-04137 PP SWL R 1100 ET • 00080-04139 PP-Mixed steel SWL R 1100 DT/ST/GT	• 2 x 00080-04138 PP SWL R 1100 ET • 2 x 00080-04140 PP-Mixed steel SWL R 1100 DT/ST/GT	• 8 x 00070-00435 paper filter 20 µm		

OPTIONAL

• 00070-00435 polyester filter	• 00070-00438 Hepa filter	model ET: • 4 x 00055-00157 tubular battery pb-acid - 6V 320 Ah C5 • 3x 10002-07046 • 1x 10002-07866	model ET: • 00056-00069 - battery charger 24V-60A 230V 50-60 Hz	• 4x 00055-00142

SWL R 1100 Bin-Up

POWERED by HONDA™

MORE INFO

CHARACTERISTICS

• Large filter surface distributed on 8 cartridge filters fitted with electric filter shaker. • Side brush raising control. • **Complete right/left side brush**. • Anti-trace wheels (mod.ET). • 2 m steering angle and lift flap pedal. • Main brush pressure regulation. • Service and parking brake. • Hour meter and klaxon and flashing light. • Indirect back collection. • Front dust vacuum system. • Quick changing of the main brush and side brush without tools. • Long life elastic belts. • Suction selection lever. • Antistatic device. • Battery level indicator (mod.ET). • 115 lt wide collector tank. • Dumping height, hydraulic lift 1450 mm • Heavy duty steel frame. • Adjustable seat. • Battery and battery charger not included. • 24V - 1200W AC three-phase traction motor • **Front working light system.**

TECHNICAL DATA

	SWL R 1100 ET BIN-UP	SWL R 1100 DT BIN-UP	SWL R 1100 ST BIN-UP
code	39002-00043	39002-00041	39002-00045
main brush width	800mm / 31,50 inc	800mm / 31,50 inc	800mm / 31,50 inc
main brush + 1 side brush	1050mm / 41,34 inc	1050mm / 41,34 inc	1050mm / 41,34 inc
main brush + 2 side brushes	1300mm / 51,19 inc	1300mm / 51,19 inc	1300mm / 51,19 inc
collector tank	115 lt / 30,3 gal	115 lt / 30,3 gal	115 lt / 30,3 gal
max working capacity	9700 m^2/h-104409 ft^2/h	9700 m^2/h-104409 ft^2/h	9700 m^2/h-104409 ft^2/h
traction / limiting gradient	front wheels / 20%	front wheel / 10%	front wheel / 10%
max speed	7,5 km/h-4,66 mile/h	7,5 km/h-4,66 mile/h	7,5 km/h-4,66 mile/h
motor type / power	24V/3,47 kW	Diesel Yanmar 6,6 Hp/4,9 kW	Honda 5,8 Hp/4,3 kW
filtering surface	6,4 m^2 / 68,89 ft^2	6,4 m^2 / 68,89 ft^2	6,4 m^2 / 68,89 ft^2
filter shaker	electric	electric	electric
dimension (cm)/weight	160x101x130/448 kg	160x101x130/454 kg	160x101x130/434 kg

PLUS

Complete right/left side brush with brush raising control system

Heavy duty steel frame and wide collector tank. Perfectly balanced weight of the components, thus resulting in totally safe quick changes of direction

Panel control with: suction switch off system, battery level indicator (ET model), on/off key, hour meter and horn. Flashing light and front working light system

DSA system: unload device for tank emptying into dust containers up to 145 cm height.

Available models with limiting gradient 20%

- SWL R 1100 DT BIN-UP cod. 39002-00057
- SWL R 1100 ST BIN-UP cod. 39002-00059

On request model with overhead guard

STANDARD EQUIPMENT

• 00080-04137 PP SWL R 1100 ET • 00080-04139 PP-Mixed steel SWL R 1100 DT/ST/GT	• 2 x 00080-04138 PP SWL R 1100 ET • 2 x 00080-04140 PP-Mixed steel SWL R 1100 DT/ST/GT	• 8 x 00070-00435 paper filter 20 µm		

OPTIONAL

• 00070-00435 polyester filter	• 00070-00438 Hepa filter	model ET: • 4 x 00055-00157 tubular battery pb-acid - 6V 320 Ah C5 • 1x 10002-07866 • 1x 10002-08044	model ET: • 00056-00069 - battery charger 24V-60A 230V 50-60 Hz	

SWL R 1200 Bin-Up

MORE INFO

CHARACTERISTICS

• Hydraulic traction on the front wheel (DT model) • Electronic traction on the 2 rear wheels (ET model) • Suction filter with 11 m² bags of filtering surface • Double electric filter vibrator (DT model) • Electric filter vibrator (ET model) • 2 Intake fans • Hydraulic service brake (DT model) • Service brake and drum parking on the rear wheels (ET model) • Drum parking brake (DT model) • Maximum surmountable slope: 18% (DT model) • Maximum climbable slope: 20% (ET model) • Intake closure • Front fender wheels • Strobe flash on bonnet • Right and left side brush Ø 500 mm with speed regulator (DT model), with independent motors (ET model) • Electric controls side brush (DT model) • Central brush 880 mm x Ø 350 mm in ppl/steel (DT model), ppl only (ET model) • Flap pedal • Super elastic rubber wheels Ø 330 • Hydraulic drainage height collection drawer: From 400 to 1430 mm • Actual collection drawer capacity: 180 l • Hour meter and horn • Fuel reserve indicator light (DT model) • Front working lights system

TECHNICAL DATA

	SWL R 1200 ET BIN-UP	SWL R 1200 DT BIN-UP
code	39002-00113	39002-00114
main brush width	900 mm	900 mm
main brush + 1 side brush	1150 mm	1150 mm
main brush + 2 side brushes	1440 mm	1440 mm
collector tank	180 lt	180 lt
max working capacity	11500 m²/h	11500 m²/h
traction / limiting gradient	rear electronics/20%	front hydraulic system/18%
max speed	2.20 m/s	2.20 m/s
motor type / power	24V/2.98 W	Kubota Z 602/14 Hp Diesel 10.6 kW
filtering surface	11 m²	11 m²
filter shaker	electric	electric
dimension (cm)/weight	190x130x153/750 kg	190x130x153/870 kg

PLUS

Right and left side brush Ø 500 mm with speed regulator (DT model), with independent motors (ET model). Electric controls side brush (DT model). Hydraulic traction on the front wheel (DT model). Electronic traction on the 2 rear wheels (ET model).

Heavy duty steel frame and wide collector tank. Actual collection drawer capacity 180 litres.

Suction filter with 11 mq bags of filtering surface. Double electric filter vibrator (DT model). Electric filter vibrator (ET model)

DSA system: hydraulic drainage height collection drawer, from 400 to 143 cm

On request model with overhead guard

STANDARD EQUIPMENT

• 00080-05107 PP Brush SWL R 1200 ET • 00080-05108 Mixed steel brush SWL R 1200 DT	• 2 x 00080-05109 PP Side Brush SWL R 1200 ET • 2 x 00080-05110 Side brush mixed steel SWL R 1200 DT	• 00070-00756 class M bag filter		

OPTIONAL

• 00070-00757 Scalar bags filter w/T452novates class M separator • 00070-00758 Scalar bags filter w/class M bia separator	model ET: • 4 x 00055-00157 tubular battery pb-acid - 6V 320 Ah C5 + 3 x 10002-07046 cad. + 1x 10002-08086	model ET: • 1x 00055-00164 Battery box 24V 400Ah Pb-acid	model ET: • 00056-00069 - battery charger 24V-60A 230V 50-60 Hz	• 00072-00546 overhead guard

SWL R 1300 DT Bin-Up

MORE INFO

CHARACTERISTICS

• Compact, handy, sturdy and resistant, easy to use • High performance in terms of (m^2/h), both in terms of cleaning and dust control • Large tank size, brushes, motor power • Cleaning of large surfaces starting from 19.000 m^2/h • Central brushes • Right side floating brush • Dust control through filtering system • Polyester bag filter • Electric filter shaker • Closed circuit hydraulic drive • Steering with power steering on the rear wheel • Waste discharge directly in the designated areas • Hydrostatic traction • Optional: green water-repellent filter (guarantees high filtration up to 1 micron)

TECHNICAL DATA

	SWL R 1300 DT BIN-UP 1 brush	SWL R 1300 DT BIN-UP 2 brushes
code	39002-00066	39002-00128
main brush width	1000mm / 40 inc	1000mm / 40 inc
main brush + 1 side brush	1485mm / 58,4 inc	1485mm / 58,4 inc
main brush + 2 side brushes	-	1615mm / 63,5 inc
collector tank	490 lt / 129,4 gal	490 lt / 129,4 gal
max working capacity	19200 m^2/h-206667 ft^2/h	19200 m^2/h-206667 ft^2/h
traction / limiting gradient	Hydrostatic / 18%	Hydrostatic / 18%
max speed	12 km/h-7,4 mile/h	12 km/h-7,4 mile/h
motor type / power	Kubota/diesel 20HP - 14,7 kW	Kubota/diesel 20HP - 14,7 kW
filtering surface	8 m^2 / 86,1 ft^2	8 m^2 / 86,1 ft^2
filter shaker	electric	electric
dimension (cm)/weight	225x145x154/950 kg	225x145x154/950 kg

PLUS

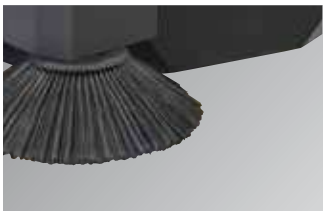

Compact, handy, sturdy and resistant, easy to use. Large tank size, brushes, motor power. Right side floating brush

Large central brushes size

Polyester bag filter with electric filter shaker. Dust control through filtering system

Steering with power steering on the rear wheel

STANDARD EQUIPMENT

• 00080-05193 Main mixed steel brush	• 00080-05192 Mixed steel side brush	• 00070-00781 Pocket filter		

SWL R 1300 DT Bin-Up with overhead guard

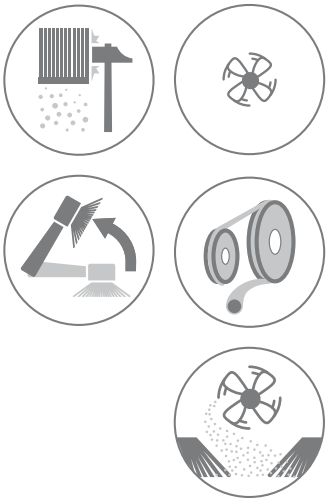

MORE INFO

CHARACTERISTICS

• Compact, handy, sturdy and resistant, easy to use • High performance in terms of (m^2/h), both in terms of cleaning and dust control • Large tank size, brushes, motor power • Cleaning of large surfaces starting from 19.000 m^2/h • Central brushes • Right side floating brush • Dust control through filtering system • Polyester bag filter • Electric filter shaker • Closed circuit hydraulic drive • Steering with power steering on the rear wheel • Waste discharge directly in the designated areas • Hydrostatic traction • Roll-bar open cabin • Overhead guard • Optional: green water-repellent filter (guarantees high filtration up to 1 micron)

TECHNICAL DATA

	SWL R 1300 DT BIN-UP 1 brush	SWL R 1300 DT BIN-UP 2 brushes
code	39002-00105	on request
main brush width	1000mm / 40 inc	1000mm / 40 inc
main brush + 1 side brush	1485mm / 58,4 inc	1485mm / 58,4 inc
main brush + 2 side brushes	-	1615mm / 63,5 inc
collector tank	490 lt / 129,4 gal	490 lt / 129,4 gal
max working capacity	19200 m^2/h-206667 ft^2/h	19200 m^2/h-206667 ft^2/h
traction / limiting gradient	Hydrostatic / 18%	Hydrostatic / 18%
max speed	12 km/h-7,4 mile/h	12 km/h-7,4 mile/h
motor type / power	Kubota/diesel 20HP - 14,7 kW	Kubota/diesel 20HP - 14,7 kW
filtering surface	8 m^2 / 86,1 ft^2	8 m^2 / 86,1 ft^2
filter shaker	electric	electric
dimension (cm)/weight	225x145x236/950 kg	225x145x236/950 kg

PLUS

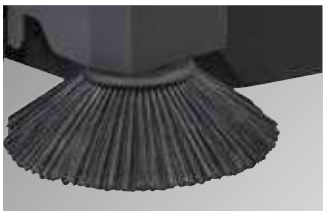

Compact, handy, sturdy and resistant, easy to use. Large tank size, brushes, motor power. Right side floating brush

Heavy duty overhead guard

Polyester bag filter with electric filter shaker. Dust control through filtering system

Large central brushes size. Steering with power steering on the rear wheel

STANDARD EQUIPMENT

• 00080-05193 Main mixed steel brush	• 00080-05192 Mixed steel side brush	• 00070-00781 Pocket filter		

SWL R 1300 DT Bin-Up with glass cabin

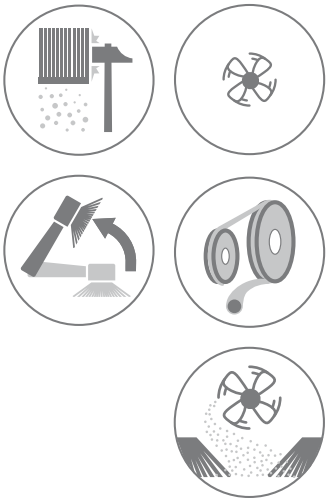

MORE INFO

CHARACTERISTICS

• Compact, handy, sturdy and resistant, easy to use • High performance in terms of (m^2/h), both in terms of cleaning and dust control • Large tank size, brushes, motor power • Cleaning of large surfaces starting from 19.000 m^2/h • Central brushes • Right side floating brush • Dust control through filtering system • Polyester bag filter • Electric filter shaker • Closed circuit hydraulic drive • Steering with power steering on the rear wheel • Waste discharge directly in the designated areas • Hydrostatic traction • Glass cabin with air conditioner system cod.39002-00111 • Optional: green water-repellent filter (guarantees high filtration up to 1 micron)

TECHNICAL DATA

	SWL R 1300 DT BIN-UP 1 brush	SWL R 1300 DT AC BIN-UP 1 brush	SWL R 1300 DT BIN-UP 2 brushes	SWL R 1300 DT AC BIN-UP 2 brush
code	39002-00106	39002-00111	on request	on request
main brush width	1000mm / 40 inc	1000mm / 40 inc	1000mm / 40 inc	1000mm / 40 inc
main brush + 1 side brush	1485mm / 58,4 inc	1485mm / 58,4 inc	1485mm / 58,4 inc	1485mm / 58,4 inc
main brush + 2 side brushes	-	-	1615mm / 63,5 inc	1615mm / 63,5 inc
collector tank	490 lt / 129,4 gal	490 lt / 129,4 gal	490 lt / 129,4 gal	490 lt / 129,4 gal
max working capacity	19200 m^2/h-206667 ft^2/h	19200 m^2/h-206667 ft^2/h	19200 m^2/h-206667 ft^2/h	19200 m^2/h-206667 ft^2/h
traction / limiting gradient	Hydrostatic / 18%	Hydrostatic / 18%	Hydrostatic / 18%	Hydrostatic / 18%
max speed	12 km/h-7,4 mile/h	12 km/h-7,4 mile/h	12 km/h-7,4 mile/h	12 km/h-7,4 mile/h
motor type / power	Kubota/diesel 20HP - 14,7 kW	Kubota/diesel 20HP - 14,7 kW	Kubota/diesel 20HP - 14,7 kW	Kubota/diesel 20HP - 14,7 kW
filtering surface	8 m^2 / 86,1 ft^2	8 m^2 / 86,1 ft^2	8 m^2 / 86,1 ft^2	8 m^2 / 86,1 ft^2
filter shaker	electric	electric	electric	electric
dimension (cm)/weight	225x145x236/950 kg	225x145x236/950 kg	225x145x236/950 kg	225x145x236/950 kg

PLUS

Compact, handy, sturdy and resistant, easy to use. Large tank size, brushes, motor power. Right side floating brush

Heavy duty glass cabin (code 39002-00106). Heavy duty glass cabin with air conditioner system (code 39002-00111)

Polyester bag filter with electric filter shaker. Dust control through filtering system

Large central brushes size. Steering with power steering on the rear wheel

STANDARD EQUIPMENT

• 00080-05193 Main mixed steel brush	• 00080-05192 Mixed steel side brush	• 00070-00781 Pocket filter		

Fms

Fleet Management System

Lavor's **Fleet Management System** allows having your entire fleet of floor scrubbers and sweepers in a cloud on the Web or mobile. **FMS** shows the current status of your fleet by providing all useful, real-time data on the operator's driving status and machines' condition. A simple and intuitive dashboard shows all the information needed to measure machine efficiency and productivity:

Battery monitoring

You can view the progress of battery charging and discharging. In models equipped with a current sensor, the AH delivered power consumption can be displayed.

Work area: management of business areas

You can know the location, status and activities of the machines in real time while setting the work areas. The configuration of areas is totally customizable; in fact, a work area of any shape and size can be drawn on the map, outside of which the machine may reduce its functions.

Mobile app for real-time monitoring

A service (for consultation purposes only, for now) allows users to display the portal homepage, machine section, alarm section and map section. In addition, the **Fleet Management System** comes along with a primary appraisal that will certify the system for the purchaser, detailing the system itself.

THE TECHNOLOGIES INCLUDED OFFER MULTIPLE BENEFITS

- Increased productivity through shorter set-up times, reduced errors and downtime
- Improved quality of operation and maintenance
- Increased product competitiveness due to IOT-derived advanced features.

SWEEPERS FMS RANGE

39002-00091	SWL R950 ET - FMS
39002-00092	SWL R990 ET - FMS
39002-00088	SWL R1100 ET BIN-UP - FMS
on request	SWL R1200 ET BIN-UP - FMS
-	SWL R1300 DT BIN-UP - FMS

GV series is suitable to degrease and sanificate any object or surface in an easy, ecological and definitive way.

GV range is made up of electric generators, vacuum steam generators, vacuum steam generators with foam system.
Ideal for food and baking industry, for private and institutional use, for pharmaceutical and mechanical industry, for dairy factories, for building sectors and so on.

Performances: temperature, steam production and pressure
The same remarks about pressure and delivery rate made for high-pressure cleaners, have to be taken into consideration also for steam generators; in this case, the important difference is the physical relationship (and so not subjective or debatable) that exists between steam pressure and its temperature: to a fixed pressure values correspond right and univocal temperature.
Knowing these values it is easy to identify the ones (like us) who show the right double relation between pressure and temperature.
Outlet steam temperature (not boiler temperature, that is higher)
is important because there are natural limits (about 140°C) under which it is not possible to talk about sanification and so the purpose that led to the machine purchase (clearly wrong) could be unattended.

Is it better a steam generator or a hot water high-pressure cleaner?
As far as the choice is concerned, the aspects to be considered are the analysis of the task that must be done and all the elements that make up the cost of the operation, i.e. working speed (labour cost) and (more and more important) waste treatment (waste disposal cost).
As far as the working speed is considered, it is important the whole cleaning procedure and not only the effective washing time: with the high-pressure cleaner it is not possible an indoor washing, unless there is a filled in collection system, instead it is necessary to move the washing phase outside; with the steam generator it is not necessary to move outside, it is possible to wash the part exactly where it is, because the water generated can be easily dried.
Steam at 180°C allow to degrease dirt also without the use of heavy chemical products. If they are necessary to speed up the washing task, it is very important to consider the cost of draining away dirty water. The danger of chemical products used is generally proportional to the effectiveness against increasing dirt tenacity.
If we wash with the high-pressure cleaner we produce from 10 to 21 litres of polluted water, that must be collected and drained following the current regulation: in a single wash of a couple of hours 2,5 tons of dirty water is produced!
If we wash with a steam generator, the most powerful machine produces 37 litres per hour, with the most part of the liquid that evaporates, with a two hour wash the remaining dampness and disinfecting product is very low!
Analyzing all these subjects it is clear that in particular circumstances (lack of purification plant for water treatment), the steam generator is more advantageous of a high-pressure cleaner. On the other side, rinsing speed is the consequence to the delivery rate that hits dirt, so if only the washing phase is considered, high-pressure cleaner is faster.
Steam can be considered water with a related dampness very, very low (superheated steam is just hot air and it doesn't have a significant mechanical action…), with an outlet temperature much higher (180°C) than a high-pressure cleaner: this means that the mechanical power is lower than the one of water, but the degreasing power of steam is much higher.

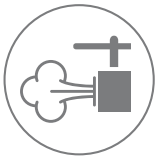

• Discharge valve
Allows a complete discharge of the boiler (not possible even through gun use). In this way it is possible to remove water and limestone residual inside the boiler and from the coil surface. This valve maybe opened only when the boiler is not hot, and it is recommended to accomplish regularly.

• Unlimited autonomy
The boiler is refilled by a water pump that gets water from an external water tank. This system allows an unlimited autonomy, because it is not necessary to turn off the steam generator and wait a lower temperature to refill with water.
An automatic control recharges the boiler when necessary. In some models there is an acoustic signal advising about low water level inside the water tank.

• Integrated vacuum
Dirt is vacuumed inside a tank integrated in the machine

• Multipurpose washable filter
It combines all the advantages of the cartridge filter but with the plus that it can vacuum both dry and wet at the same time. It can be washed with tap water.

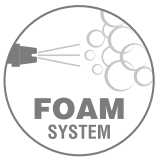

• Foam system
the machine is equipped with connection for compressed air and pressure gauge for foam cleaning. Using the lance with the hose a thick foam can be produced that will stay on the dirty components, giving more effectiveness to the detergent.

• Temperature regulator
It is possible to adjust the hot water outlet temperature.
In this way, different temperatures can be selected depending on the dirt to be removed.

• Integrated battery charger
Some models are equipped with integrated battery charger, other ones have the predisposition only. It is possible to charge batteries in different rooms, without coming back to the same place.

• Integrated battery
Standard integrated battery is built with a maintenance free technology and it does not require restrictions about the place for battery charging. The non stop research allow to use always up-to-date batteries that combined with appropriate battery charger grant machine top performances.

Technical information

Code	Model	Page	Absorbed power	Suction motor	Max pressure	Steam production	Max Temperature	Heating and activation time required	Water tank capacity	Detergent tank capacity	Packaging dimensions	Packaging weight	Packaging weight	Pieces for pallet
			W	W	bar	Kg/h	°C	min	l	l	mm L x l x h	kg	lbs	n°
45001-00005	GV KONE	324	2300	-	4	2,6	143	10	1,6	-	470x330x350	8	17,64	25
45002-00003	GV Egon VAC 4.1 Plus	326	1900	1200	5	2,3	152	2	1,2	-	550x400x500	14	30,86	12
45004-00033	GV ETNA-R 5.1	328	3000	1100	7	3,25	165	4	5	5	750x600x1030	42,5	93,69	4
45004-00037	GV ETNA-R 5.1 FR	328	3000	1100	7	3,25	165	4	5	5	750x600x1030	42,5	93,69	4
45004-00036	GV ETNA-R 5.1 FOAM	330	3000	1100	7	3,25	165	4	5	5	750x600x1030	42,5	93,69	4
45006-00001	GV KATLA	332	3300	-	9	4,62	175	7	5	5	750x600x700	31	91,27	4
45003-00038	GV 3 M PLUS	334	3000	-	9	4,2	175	8	5	5	595x435x650	37	81,57	8
45003-00010	GV 3.3 M PLUS	334	3300	-	9	4,62	175	7	5	5	595x435x650	37	81,57	8
45010-00006	GV 5 T PLUS	336	5000	-	9	8	175	7	10	5	595x435x650	40	88,18	8
45010-00001	GV 8 T PLUS	336	8000	-	9	13,50	175	6	10	5	595x435x650	40	88,18	8
45012-00003	GV 3.0 VAC	338	3000	1100	8	4,2	170	-	5	5	450x850x960	6	-	6
45012-00005	GV 5.0 VAC	338	5000	1100	8	8	170	-	5	5	450x850x960	6	-	6

Code	Model	Page	Absorbed power	Suction motor	Max pressure	Steam production	Max Temperature	Heating and activation time required	Water tank capacity	Detergent tank capacity	Packaging dimensions	Packaging weight	Packaging weight	Pieces for pallet
			W	W	bar	Kg/h	°C	min	l	l	mm L x l x h	kg	lbs	n°
45005-00010	GV VESUVIO 10	340	10000	-	10	14,8	180	9	25	5	1300x780x1080	134	295,41	1
45005-00029	GV VESUVIO 15	340	30000	-	10	22,2	180	8	25	5	1300x780x1080	134	295,41	1
45005-00002	GV VESUVIO 18	340	18000	-	10	26,50	180	7	25	5	1300x780x1080	134	295,41	1
45005-00030	GV VESUVIO 21	340	21000	-	10	31	180	7	25	5	1300x780x1080	134	295,41	1
45005-00001	GV VESUVIO 30	340	30000	-	10	44,50	180	6	25	5	1300x780x1080	134	295,41	1
45009-00001	GV METIS	342	350	-	8,5	50/90	178	5	18	-	1130x710x1110	110	286,60	1
45013-00001	GV KOLUMBO	344	350	-	8,5	50/90	178	5	25	2,5	1300x780x1080	140	308,64	1
45013-00020	GV KOLUMBO cordless	344	350	-	8,5	50/90	178	5	25	2,5	1300x780x1080	140	308,64	1
45013-00012	GV KOLUMBO 2 Ways	344	350	-	8,5	50/90	178	5	25	2,5	1300x780x1080	140	308,64	1
45013-00022	GRAFFITI WASTER	346	350	-	8,5	50/90	178	5	25	2,5	1500x1300x780	182	401	1

GV Kone

MORE INFO

CHARACTERISTICS

• Satured steam at 4 bar at a temperature of 143°C • Boiler 2,3 kW • Heating and activation time required: 10 min • Pressure switch • Double thermostat • Cap with protection against anti-unscrewing and safety valve • Handy accessory compartment with electric cable holder • Control panel with lamps • Impact resistant covers • Steam regulation • Thermometer • Power cable 6 m.

TECHNICAL DATA

	GV Kone
code	45001-00005
max steam pressure/temperature	4 bar/143° C
boiler absorbed power	2300 W/220-240V ~ 50-60Hz
steam production	2,6 kg/h max
boiler type/volume	Alluminium/2,4 l
dimension (cm)/weight	46x32x32/7,5 kg

PLUS

Lavor steam cleaner GV Kone sanitizes and sterilizes every surface with steam power, without using detergents or disinfectants. GV Kone is environmental friendly.

Steam regulation allows washing adjusting considering the surface to be treated: in this way every kind of surface has the right treatment.

The machine is user friendly and has a wide range of accessories: GV Kone is a confortable and safe daily working tool.

Steam cleaning function is perfect in shops, premises, offices as well as in household application and removes the toughest and hidden dirt while eliminating mites, germs and bacteria.

STANDARD EQUIPMENT

• Hose 2,8 m	• 2x 00080-02896	• 00080-02874	• 00080-04371	• 00080-02875
• 00080-04372	• 00080-02926	• 00080-03753	• 00054-01389	• 00032-00339
• 00080-04692	• 10001-10731			

GV Egon VAC 4.1 Plus

WASHABLE

NO-STOP REFILLING

MORE INFO

CHARACTERISTICS

• ABS body • Ready steam warning lamp • Boiler 1,9 kW Stainless steel AISI 304 • Low level water lamp indicator • Boiler is refilled continuously • Flex hose 2 m • Wheels suitable for use in food processing area • ON/OFF main switch with indicator lamp • ON/OFF boiler switch with indicator lamp • Steam regulation • Recovery tank capacity 8 l. • Washable filter • HEPA filtering system H14 cod. 00070-00605 • Pressure gauge. • Suction speed control (4 level) on handle

TECHNICAL DATA

	GV Egon VAC 4.1 Plus
code	45002-00003
max steam pressure/temperature	5 bar/152° C
boiler absorbed power	1900 W/220-240V ~ 50-60Hz (Ph 1)
vacuum motor absorbed power	1200 (max 1400) W
column depression/air flow	24 kPa/220 m^3/h
recovery tank capacity	8 l
dimension (cm)/weight	55x40x35/14,3 kg

PLUS

User friendly control panel with ON/ OFF main switch and steam ready light. Equipped with stainless steel boiler with unlimited autonomy, ready in a few minutes

Egon Vac 4.1 is equipped with an HEPA H14 filter which remove the 99.995% of the air contaminants preventing the spread of bacterial and viral organism present in the air.

Steam regulation directly from the gun

Fully removable recovery tank for easy eptying and perfect tank cleaning

STANDARD EQUIPMENT

• 10002-06232	• 2 X 00080-01883	• 00080-02052	• 00071-02658	• 00071-02659
• 00071-02660	• 00080-03750 PEK	• 00080-03752 Stainless steel	• 00080-03751 Brass	• 00080-02911
• 00080-02061	• 00071-02668	• 00071-02669	• 00080-01912	• 10001-08349
• 00080-01980	• 00080-04382	• 00080-02077	• 10001-10694	• 00080-02076
• 00009-02541	• 00080-03121			

GV Etna-R 5.1

MORE INFO

CHARACTERISTICS

• Stainless steel body AISI 304 • Ready steam warning lamp • Boiler 3 kW Stainless steel AISI 304 - Thickness 25/10 • Low level water lamp indicator • Boiler is refilled continuously • Switch for using chemicals and detergents mixed with steam • Device for cleaning hot water mixed with steam • Washable filter • Flex hose 4 m • Recovery tank capacity 64 l • Drain hose system • Steam regulation • Wheels suitable for use in food processing area • ON/OFF main switch with indicator lamp • ON/OFF boiler switch with indicator lamp • Boiler volume 4,3 l • Suction control on handle (model GV etna-R 5.1) with low tension control.

TECHNICAL DATA

	GV Etna-R 5.1	GV Etna-R 5.1 FR
code	45004-00033	45004-00037
max steam pressure/temperature/ steam production	7 bar/165° C/3,25 kg/h	7 bar/165° C/3,25 kg/h
boiler absorbed power	3000 W/220-240V ~ 50-60Hz (Ph 1)	3000 W/220-240V ~ 50-60Hz (Ph 1)
vacuum motor absorbed power	1100 W	1100 W
column depression/air flow	22 kPa/220 m^3/h	22 kPa/220 m^3/h
water tank/detergent tank capacity	5 l/5 l	5 l/5 l
dimension (cm)/weight	75x60x103/32 kg	75x60x103/35 kg

PLUS

Simple and intuitive control panel, quick-coupling steam gun, main ON/OFF switch with lamp, boiler ON/OFF switch with lamp, steam/detergent regulator/selector, steam flow rate regulator, steam ready warning lamp, low level water indicator lamp with buzzer, steam pressure gauge.

Unlimited autonomy thanks to the continuous power supply of the boiler, which enables water top-ups in the tank without having to stop the machine or interrupt work. Discharge pipe to quickly drain dirty water collected without removing the head.

Two electronical alarms, standby inactivity after 30 min. Maximum safety thanks to the 2 safety thermostats, 1 pressure switch and 1 mechanical maximum pressure valve.

Recommended for hospitality, community & healthcare like buildings cleaning, spa & sport, education & community, healthcare or industry, transportation, car washers, car dealers.

STANDARD EQUIPMENT

• 10002-06216 Hose 4 m (mod. GV Etna 5.1) • 10002-06204 Hose 4 m (mod. GV Etna 5.1 FR)	• 2 x 00080-01894	• 00009-02540	• 00080-01912	• 00080-02020
• 00071-02658	• 00071-02659	• 00071-02660	• 10001-09774	• 00080-02022
• 00080-02034	• 00071-02665	• 00071-02666	• 00080-02027	• 00080-02055
• 00080-02061	• 10001-08263	• 00005-02174 Sponge accessory		

GV Etna-R 5.1 Foam

MORE INFO

CHARACTERISTICS

• Stainless steel body AISI 304 • Ready steam warning lamp • Boiler 3 kW stainless steel AISI 304 - Thickness 25/10 • Low level water lamp indicator • Boiler is refilled continuously • Switch for using chemicals and detergents mixed with steam • Device for cleaning hot water mixed with steam • Washable filter • Flex hose 4 m • Recovery tank capacity 64 l • Drain hose system • Steam regulation • Wheels suitable for use in food processing area • ON/OFF main switch with indicator lamp • ON/OFF boiler switch with indicator lamp • Boiler volume 4,3 l • Suction control on handle with low tension control.

TECHNICAL DATA

	GV Etna-R 5.1 Foam
code	45004-00036
max steam pressure/temperature/ steam production	7 bar/165° C/3,25 kg/h
boiler absorbed power	3000 W/220-240V ~ 50-60Hz (Ph 1)
vacuum motor absorbed power	1100 W
column depression/air flow	22 kPa/220 m^3/h
water tank/detergent tank capacity	5 l/5 l
dimension (cm)/weight	75x60x103/36 kg

PLUS

New simple and intuitive control panel, quick-coupling steam gun, steam function/compressed air function selector, water/detergent selector, steam flow rate regulator, steam ready indicator lamp, low water level indicator lamp with buzzer, steam pressure gauge, and air pressure gauge.

Multipurpose machine: cleaning with detergent, steam, steam with detergent, foam and hot water. Equipped with a compressed air connection and pressure gauges for air and steam. Unlimited autonomy of steam thanks to the electronically controlled power supply of the boiler.

Recommended for hospitality, community & healthcare like buildings cleaning, spa & sport, education & community, healthcare or industry, transportation, car washers, car dealers.

Recommended for car dealers, car washers, garages, car body shops, and every other place where a source of compressed air is already available

STANDARD EQUIPMENT

• 10002-06216 Hose 4 m	• 2 x 00080-01894	• 00009-02540	• 00080-01912	• 00080-03096
• 00080-03748	• 10001-09774	• 00080-02022	• 00080-02034	• 00071-02665
• 00071-02666	• 00080-02027	• 00080-02055	• 00080-02061	• 10001-08263
• 00005-02174 Sponge accessory	• 00073-00142 1l. LC prefoam			

GV Katla

NO-STOP REFILLING

MORE INFO

CHARACTERISTICS

• Satured steam at 9 bar at a temperature of 175°C • Steam gun with low tension control • Stainless steel body AISI 304 • Boiler 3,3 kW Stainless steel AISI 304. Thickness 25/10 • Low level water lamp indicator • Device for using chemicals and detergents mixed with steam • Heating and activation time required: 7 min. • Steam regulation • Discharge valve • Pressure gauge • The boiler can be refilled from the tank provided (continuous duty) • Wheels suitable for food and processing areas • Storage basket.

TECHNICAL DATA

	GV Katla
code	45006-00001
max steam pressure/temperature	9 bar/175° C
boiler absorbed power	3300 W/220-240V ~ 50-60Hz (Ph 1)
steam production	4,62 kg/h
boiler type/volume	Inox AISI 304/4,6 l
water tank/detergent tank capacity	5 l/5 l
dimension (cm)/weight	43x62x91/27 kg

PLUS

Simple and intuitive control panel, quick-coupling steam gun, water/detergent selector, steam flow rate regulator, steam ready indicator lamp, low water level indicator lamp with buzzer, steam pressure gauge. Steam gun with integrated steam/detergent function activation key and quick coupling of accessories.

Unlimited autonomy thanks to the continuous power supply of the boiler, which enables water top-ups in the tank without having to stop the machine or interrupt work, with major time saving in the operating phase. Boiler with saturated steam at 9 bar at a temperature of 175°C. Equipped with 3 pumps: boiler, detergent and water.

Discharge valve for complete discharge of the boiler; it eliminates water residues and formation of lime scale, thus lengthening the lifespan of the boiler. A 5-litre water and detergent double tank. A rich and complete range of accessories is supplied.

Recommended for hospitality, community & healthcare like buildings cleaning, spa & sport, education & community, healthcare or industry, transportation, car washers, car dealers.

STANDARD EQUIPMENT

• 10002-06391 Hose 3 m	• 2 x 00080-01873	• 00080-04317	• 00080-04318	• 00080-02040
• 00080-02049	• 00080-02039	• 10001-09769	• 00080-04382	• 00080-04322
• 00080-02911	• 00080-04692			

OPTIONAL

• 10002-06389 Steam gun with hose (10 m)	• 00080-02065 Long steam lance			

GV 3 M Plus/GV 3,3 M Plus

NO-STOP REFILLING

MORE INFO

CHARACTERISTICS

• Satured steam at 9 bar at a temperature of 175°C • Steam gun with low tension control • Made of AISI 304 stainless steel • Boiler stainless steel AISI 304. Thickness 25/10 • Heating and activation time required: 7 min. (model GV 3,3 M Plus) • Steam regulation • Discharge valve • Pressure gauge • Device for using chemicals and detergents mixed with steam • The boiler can be refilled from the tank provided (continuous duty) • Pivoting wheels with brakes, suitable for use in food processing areas.

TECHNICAL DATA

	GV 3 M PLUS	GV 3,3 M PLUS
code	45003-00038	45003-00010
max steam pressure/temperature	9 bar/175° C	9 bar/175° C
boiler absorbed power	3000 W/220-240V ~ 50-60Hz (Ph 1)	3300 W/220-240V ~ 50-60Hz (Ph 1)
steam production	4.2 kg/h	4.62 kg/h
boiler type/volume	Inox AISI 304/4,6 l	Inox AISI 304/4,6 l
water tank/detergent tank capacity	5 l/5 l	5 l/5 l
dimension (cm)/weight	62x40x86/26,5 kg	62x40x86/26,5 kg

PLUS

Simple and intuitive control panel, quick-coupling steam gun, main ON/OFF switch with lamp, boiler resistance activation lamp, steam flow rate regulator, steam ready indicator lamp, steam pressure gauge.

Unlimited autonomy thanks to the continuous power supply of the boiler, which enables water top-ups in the tank without having to stop the machine or interrupt work, with major time saving in the operating phase. Boiler with saturated steam at 9 bar at a temperature of 175°C. Equipped with 2 pumps: boiler and detergent.

Maximum safety thanks to the 1 safety thermostat, 1 pressure switch and 1 mechanical maximum pressure valve. Discharge valve for complete discharge of the boiler; it eliminates water residues and formation of lime scale, thus lengthening the lifespan of the boiler.

Equipped with 4 pivoting wheels suitable for food environments.

STANDARD EQUIPMENT

• 10002-06391 Hose 3 m	• 2 x 00080-01873	• 00080-04317	• 00080-04318	• 00080-02040
• 00080-02049	• 00080-02039	• 10001-09769	• 00080-04382	• 00080-04322
• 00080-02911	• 00080-04692			

OPTIONAL

• 10002-06389 Steam gun with hose (10 m)	• 00080-02065 Long steam lance			

GV 5 T Plus/GV 8 T Plus

NO-STOP REFILLING

MORE INFO

CHARACTERISTICS

• Built-in AISI 304 stainless steel • Pivoting wheels with brakes, suitable for use in food processing areas • The boiler can be refilled from the tank provided (continuous duty) • Discharge valve • Pressure gauge • Device for using chemicals and detergents mixed with steam • Heating and activation time required: 6 min. • Control with low tension controls • Control panel: ON-OFF main switch, indicator lamp, • Satured steam at 9 bar at a temperature of 175°C.

TECHNICAL DATA

	GV 5 T PLUS	GV 8 T PLUS
code	45010-00006	45010-00001
max steam pressure/temperature	9 bar/175° C	9 bar/175° C
boiler absorbed power	5000 W/380-400V ~ 50-60Hz (Ph 3)	8000 W/380-400V ~ 50-60Hz (Ph 3)
steam production	8 kg/h	13,50 kg/h
boiler type/volume	Inox AISI 304/4,6 l	Inox AISI 304/4,6 l
water tank/detergent tank capacity	10 l/5 l	10 l/5 l
dimension (cm)/weight	62,5x37,5x86/32 kg	62,5x37,5x86/32 kg

PLUS

Simple and intuitive control panel, quick-coupling steam gun, main ON/OFF switch with lamp, boiler resistance activation lamp, steam flow rate regulator, steam ready indicator lamp, steam pressure gauge.

Unlimited autonomy thanks to the continuous power supply of the boiler, which enables water top-ups in the tank without having to stop the machine or interrupt work, with major time saving in the operating phase. Boiler with saturated steam at 9 bar at a temperature of 175°C. Equipped with 2 pumps: boiler and detergent.

Maximum safety thanks to the 1 safety thermostat, 1 pressure switch and 1 mechanical maximum pressure valve.
Discharge valve for complete discharge of the boiler; it eliminates water residues and formation of lime scale, thus lengthening the lifespan of the boiler.

Equipped with 4 pivoting wheels suitable for food environments.

STANDARD EQUIPMENT

• 00080-02898 Hose 3,5 m	• 00080-02900	• 00080-02899	• 00080-02901	• 10001-09741
• 00080-02883	• 00080-02893	• 00080-03601 Steam nozzle		

OPTIONAL

• 00080-02904 Steam gun with hose (6 m)	• 00080-02930 Steam gun with hose (10 m)	• 00080-02908 Straight lance mm 750 without nozzle	• 00080-02910 Extension 650 mm	• 00080-02912 Lance with flat nozzle
• 00080-04383 Brass bristles brush Ø 80	• 00080-02922 Lance for barrel			

GV 3.0 Vac

MORE INFO

CHARACTERISTICS

• Satured steam at 8 bar at a temperature of 170°C • Steam gun with low tension control • Made of AISI 304 stainless steel • Boiler 3,0 kW stainless steel AISI 304. Thickness 25/10 • Complete warm-up and activation phase: 7/8 min • Vacuum system • Steam regulation • Pressure gauge • Washing device with hot water mixed with steam • The boiler can be refilled from the tank provided (continuous duty) • Pivoting wheels with brakes (suitable for use in food processing areas.)

TECHNICAL DATA

	GV 3.0 Vac	GV 5.0 Vac
code	45012-00003	45012-00005
max steam pressure/temperature	8 bar/170° C	8 bar/170° C
boiler absorbed power	3000 W/220-240V ~ 50-60Hz (Ph 1)	5000 W/400V ~ 50Hz (Ph 3)
vacuum motor absorbed power	1100W	1100W
column depression/air flow	22 kPa/2200 mmH_2O	22 kPa/2200 mmH_2O
steam production	4.2 kg/h	8 kg/h
boiler type/volume	Inox AISI 304/4,6 l	Inox AISI 304/4,6 l
water tank/detergent tank capacity	5 l/5 l	5 l/5 l
dimension (cm)/weight	86x39,6x101,1/35 kg	86x39,6x101,1/51 kg

PLUS

Practical accessory compartment with integrated water and detergent tank system

New control panel with ON/OFF main switch, boiler ON/OFF switch, detergent selector, hot water selector, "NO WATER" light, "STEAM READY" light, steam adjustment, steam pressure gauge

Integrated suction system with stainless steel tank, tankcapacity 20 litres, vacuum motor power 1100W, air flow 22 kPa

Sturdy tubular varnished steel, shock proof trolley with pivoting front wheels for easy movement

STANDARD EQUIPMENT

• 10002-06251 Steam/vacuum hose 4 m	• 00080-01894	• 00009-02540	• 00080-01912	• 00080-02020
• 00080-03751	• 00080-03750	• 00080-03752	• 00071-02659	• 00071-02658
• 00071-02660	• 00080-02022	• 00080-02034	• 00071-02665	• 00071-02666
• 00080-02027	• 00080-02055	• 00080-02061	• 00070-00606	

OPTIONAL

• 10002-06389 Steam gun with hose 10 m (only steam)	• 00080-02065 Long steam lance			

GV Vesuvio

MORE INFO

CHARACTERISTICS

• Built-in AISI 304 stainless steel • Pivoting wheels with brakes, suitable for use in food processing areas • The boiler can be refilled from the tank provided (continuous duty) • Temperature regulator, discharge valve and pressure gauge • Device for using chemicals and detergents mixed with steam • Control with low tension controls • Control panel: ON-OFF main switch, indicator lamp, thermoregulator, boiler activating key, gun activating key • Timer cycle.

TECHNICAL DATA

	GV Vesuvio 10	GV Vesuvio 15	GV Vesuvio 18	GV Vesuvio 21	GV Vesuvio 30
code	45005-00010	45005-00029	45005-00002	45005-00030	45005-00001
max steam pressure/temperature	10 bar/180° C	10 bar/180° C	10 bar/180° C	10 bar/180° C	10 bar/180° C
boiler absorbed power	10000 W/400V~50-60Hz (Ph 3)	15000 W/400V~50-60Hz (Ph 3)	18000 W/400V~50-60Hz (Ph 3)	21000 W/400V~50-60Hz (Ph 3)	30000 W/400V~50-60Hz (Ph 3)
steam production	14,8 kg/h	22,2 kg/h	26.5 kg/h	31 kg/h	44.5 kg/h
boiler type/volume	Inox AISI 304/18 l	Inox AISI 304/18 l	Inox AISI 304/18 l	Inox AISI 304/18 l	Inox AISI 304/18 l
water tank/detergent tank capacity	25 l/5 l	25 l/5 l	25 l/5 l	25 l/5 l	25 l/5 l
dimension (cm)/weight	114x52,5x91,5/103 kg	114x52,5x91,5/103 kg	114x52,5x91,5/103 kg	114x52,5x91,5/103 kg	114x52,5x91,5/103 kg

PLUS

Simple and intuitive control panel, quick-coupling steam gun, main ON/OFF switch, activation lamp, electronic regulator of the temperature with digital display, low water level display with buzzer, boiler activation key, gun activation key, steam pressure gauge, steam selector and detergent selector. Steam gun with integrated steam/ detergent function activation key and quick coupling of accessories. Timer cycle.

Unlimited autonomy thanks to the continuous power supply of the boiler, which enables water top-ups in the tank without having to stop the machine or interrupt work, with major time saving in the operating phase. Boiler with saturated steam at 10 bar at a temperature of 180°C. Equipped with 2 pumps: detergent and water. Maximum safety thanks to the 2 level controls, 2 thermostat, 1 pressure switch and 1 mechanical pressure valve.

Discharge valve for complete discharge of the boiler; it eliminates water residues and formation of lime scale, thus lengthening the lifespan of the boiler.

Double tank: 25 litres for water and 5 litres for detergent. Equipped with 2 pivoting wheels and appropriate brake to use in food environments + 2 fixed wheels. A rich and complete range of accessories is supplied with practical accessory holders.

STANDARD EQUIPMENT

• 00080-02898 Hose 3,5 m	• 00080-02900	• 00080-02899	• 00080-02901	• 10001-09741
• 00080-02883	• 00080-02893	• 00080-03601 Steam nozzle (GV Vesuvio 10) • 00080-03602 Steam nozzle (GV Vesuvio 15)	• 00080-03603 Steam nozzle (GV Vesuvio 18/GV Vesuvio 21) • 00080-03605 Steam nozzle (GV Vesuvio 30)	

OPTIONAL

• 00080-02904 Steam gun with hose (6 m)	• 00080-02930 Steam gun with hose (10 m)	• 00080-02908 Straight lance mm 750 without nozzle	• 00080-02907 Steam gun with hose (20 m)	• 00080-02909 Steam gun with hose (15 m)
• 00080-02910 Extension 650 mm	• 00080-02912 Lance with flat nozzle	• 00080-04383 Brass bristles brush Ø 80	• 00080-02922 Lance for barrel	

Metis

MORE INFO

CHARACTERISTICS

• Vertical burner with high thermal efficiency steel coil • Auxiliary motor for burner • Discharge valve: allows a complete discharge of the boiler • Temperature regulator: the temperature is set-up by an electronic regulator • Steam pressure gauge • Low fuel indicator • Double pipe gasoil pump • User-friendly control panel • Unit can be continually refilled • Provided with 2 outputs for simultaneous work of two different operators.

TECHNICAL DATA

	Metis
code	45009-00001
max steam pressure/temperature	8,5 bar / 178° C
absorbed power	350 W / 220-240V ~ 50-60Hz (Ph 1)
steam production dry/wet	50/90 kg/h
burner type/fuel consumption	Diesel / 2,83 l/h
water tank/fuel tank capacity	18 l / 18 l
dimension (cm)/weight	94x65x90/87,5 kg

PLUS

Metis is a portable steam generator with a diesel fuel boiler. Unlimited autonomy thanks to no-stop water tank refilling. It does not leave any residues after cleaning. Metis water saving (over 90%) compared to normal high-pressure systems. Allows sanitisation tasks thanks to the combined use of steam and pressure. The operator does not require special protective overalls and protective masks.

Ideal for maintenance cleaning and makes the bodywork of your car or motorbike shine without the risk of damaging it with the mechanical action of the high-pressure water. Ideal for eliminating stubborn grease and dirt, leaving surfaces clean and shining. Cleaning is easy, all you need to do is use the cleaning and degreasing action of the steam at high temperature and collect residues with a microfibre cloth.

Provided with 2 outputs for simultaneous work of two different operators. Portability: it does not need to be connected neither to the water supply because it is equipped with a water tank. It is easy to move around, easy to use, and ready to use. The advantages compared to normal high-pressure washing

Ecological: It consumes very little water (90% less than normal high-pressure cleaners) and does not require connection to the water supply. Glass and delicate surfaces. Car interiors and for the most difficult parts to reach. Quick, thorough cleaning and sanitisation of mats without wetting them. It does not require a collection tank to dispose of water reflux.Thanks to the high temperature that degreases and dissolves

STANDARD EQUIPMENT

• 00080-02915 Hose 10 m	• 00080-02900	• 10001-09741	• 00080-03605 Steam nozzle	

OPTIONAL

• 00080-02916 Steam gun with hose (15 m)	• 00080-02917 Steam gun with hose (20 m)	• 00080-02908 Lance mm 750 without nozzle	• 00080-02899 Lance mm 175 without nozzle	• 00080-02901 Lance mm 425 without nozzle
• 00080-02883 Black plastic scraper l. 50	• 00080-02893 Glass wiper	• 00080-02910 Extension 650 mm	• 00080-02912 Lance with flat nozzle	• 00080-04383 Brass bristles brush Ø 80
• 00080-02922 Lance for barrel				

Kolumbo

Kolumbo 2way
With double guns for two operators

Model:
Cordless

Model:
Cordless

MORE INFO

CHARACTERISTICS

• Vertical burner with high thermal efficiency steel coil • Auxiliary motor for burner • Discharge valve: allows a complete discharge of the boiler • Temperature regulator: the temperature is set-up by an electronic regulator • Steam pressure gauge, temperature regulator and low fuel lamp • Integrated detergent tank with detergent delivery controller by the gun • Double pipe gasoil pump • User-friendly control panel • Unit can be continually refilled • Standard with double guns for 2 operators model Kolumbo 2Way code 45013-00012 • Battery version: Kolumbo Cordless code 45013-00020 (Battery charger 220-240V - 50-60Hz included).

TECHNICAL DATA

	Kolumbo	Kolumbo cordless	Kolumbo 2way
code	45013-00001	45013-00020	45013-00012
max steam pressure/temperature	8,5 bar / 178° C	8,5 bar / 178° C	8,5 bar / 178° C
absorbed power	350 W / 220-240V ~ 50-60Hz (Ph 1)	350 W / 1 x 12 DC 75 Ah C5	350 W /220-240V ~ 50-60Hz (Ph 1)
steam production dry/wet	50/90 kg/h	50/90 kg/h	50/90 kg/h
burner type/fuel consumption	Diesel / 2,83 l/h	Diesel / 2,83 l/h	Diesel / 2,83 l/h
water tank/fuel tank capacity	25 l / 25 l	25 l / 25 l	25 l / 25 l
dimension (cm)/weight	125x69x87/120 kg	125x69x87/150 kg	125x69x87/140 kg

PLUS

Kolumbo is a portable steam generator with a diesel fuel boiler. Unlimited autonomy thanks to no-stop water tank refilling. It does not leave any residues after cleaning. Water saving (over 90%) compared to normal high-pressure systems. Allows sanitisation tasks thanks to the combined use of steam and pressure.

It does not need to be connected to the water supply because it is equipped with a water tank. It is easy to move around, easy to use, and ready to use.

Ecological: It consumes very little water (90% less than normal high-pressure cleaners) and does not require connection to the water supply. • It does not require a collection tank to dispose of water reflux. • Easy to use where required, it does not require connection to the water supply, the operator does not require special work clothing, excess water is not wasted. • Ideal for maintenance cleaning and makes the bodywork of your car or motorbike shine without the risk of damaging it with the mechanical action of the high-pressure water.

It is ideal for: eliminating stubborn grease and dirt, leaving surfaces clean and shining. Cleaning is easy, all you need to do is use the cleaning and degreasing action of the steam at high temperature and collect residues with a microfibre cloth perfect for glass and delicate surfaces, car interiors and for the most difficult parts to reach.

Available: version with hose 20 m. cod. 45013-00034

STANDARD EQUIPMENT

• 00080-02903 Hose 10 m (Kolumbo 2way - Two pieces)	• 00080-02900 (Kolumbo 2way - Two pieces)	• 10001-09741 (Kolumbo 2way - Two pieces)	• 00080-03605 Steam nozzle (Kolumbo/Kolumbo cordless)	• 00080-03603 Steam nozzle (Kolumbo 2 way)

OPTIONAL

• 00080-02898 Steam gun with hose (3,5 m)	• 00080-02904 Steam gun with hose (6 m)	• 00080-02909 Steam gun with hose (15 m)	• 00080-02907 Steam gun with hose (20 m)	• 00080-02908 Lance mm 750 without nozzle
• 00080-02899 Lance mm 175 without nozzle	• 00080-02901 Lance mm 425 without nozzle	• 00080-02883 Black plastic scraper l. 50	• 00080-02893 Glass wiper	• 00080-02910 Extension 650 mm
• 00080-02912 Lance with flat nozzle	• 00080-04383 Brass bristles brush Ø 80	• 00080-02922 Lance for barrel		

Graffiti Waster

MORE INFO

CHARACTERISTICS

• Vertical burner with high thermal efficiency steel coil • Auxiliary motor for burner • Discharge valve: allows a complete discharge of the boiler • Temperature regulator: the temperature is set-up by an electronic regulator • Steam pressure gauge, temperature regulator and Low fuel lamp • Integrated detergent tank with detergent delivery controller by the gun • Double pipe gasoil pump • User-friendly control panel • Unit can be continually refilled • Battery and battery charger included (Battery charger 220-240V - 50-60Hz).

TECHNICAL DATA

	Graffiti Waster
code	45013-00022
max steam pressure/temperature	8,5 bar / 178° C
absorbed power	350 W / 1 x 12 DC 75 Ah C5
steam production wet/dry	50/90 kg/h
burner type/fuel consumption	Diesel / 2,83 l/h
water tank/fuel tank capacity	25 l / 25 l
dimension (cm)/weight	140x69x87/140 kg

PLUS

Graffiti Waster is a portable steam generator, equipped with diesel fuel boiler, allowing graffiti and dirt removal in general, thanks to the revolutionary system using steam/sand and steam/detergent mashed together. To remove all types of graffiti away from walls, buildings, floors. To restore and clean statues/monuments. Sandblasting walls andrailings.

Clean and sand blasting terracotta tiles, roofing tiles and wood. Pickle machineries and surfaces thanks to a combined use of detergents. Unlimited autonomy: thanks to no-stop water tank refilling.

Main plus in comparison to traditional sand blasting systems using air or water:

• It doesn't leave residuals at the end of cleaning task. • No water waste. • Noiseless. • Allows sanitization tasks thanks to the combined use of steam and detergents. • The operator doesn't need protective overalls and protective masks with filters. • Lack of hazardous dust that are pulled down by steam.

It doesn't need to be connected nor to water supply, because it is equipped with water tank, not to the electrical supply, because it has a diesel fuel boiler. Easy to use and always ready to use. Easy to move.

STANDARD EQUIPMENT

• 00080-02903 Hose 10 m	• 00080-02900	• 00080-02910	• 10001-09741	• 00080-02883
• 00080-02913	• 00014-01358	• 00014-01500	• 00080-03605 Steam nozzle	

OPTIONAL

• 00080-02898 Steam gun with hose (3,5 m)	• 00080-02909 Steam gun with hose (15 m)	• 00080-02907 Steam gun with hose (20 m)	• 00075-00005 Calibrated sand (5 kg)	• 00080-02922 Lance for barrel
• 00080-02899 Lance mm 175 without nozzle	• 00080-02901 Lance mm 425 without nozzle			

In order to complete the chemical products supply and to allow a better applicability and effectiveness, the sprayers are the perfect solution when supply wideness, use versatility and dosage saving are taken into consideration.

They are split into two different categories: pneumatic charge and continuous pneumatic charge.

Pneumatic charge sprayers need to be connected to an air compressor to charge the tank and allow the product vaporization without the connection to the air compressor. They work at high-pressures and so they use capacious steel or stainless steel tanks to allow a greater working autonomy.

Continuous pneumatic foam sprayers need a permanent connection to an air compressor; in this way air mixes with the chemical product producing a soft and voluminous foam that persists on surfaces: with a little chemical product, it is possible to treat wider areas or tough dirt (also on ceilings, inclined and/or slippery walls).
They work at high-pressure and so they use capacious steel or stainless steel tanks to allow a greater working autonomy.

The chemical product spraying is a finishing phase of cleaning task with other machines. The choice of the right product considering the kind of cleaning task grants the best result, complying with the environment and the machine that sprays the chemical product. Our chemical products range has been conceived complying with the strictest rules protecting the environment and avoiding the indiscriminating use of products damaging the environment. The right measuring and respect of the instructions we suggest are the best balance of the economical and technical needs of each up-to-date and aware cleaning task.

Code	Model	Page	Product	Capacity	Recharging	Working pressure	Category	Single packaging weight	Single packaging weight	Single packaging dimensions	Pieces for pallet	Pallet dimensions
				liters		bar		kg	lbs	cm L x l x H	N°	cm L x l x H
10001-10260	FOAM BOX	349	Foam sprayer	-	Air operating	4	Box	5 kg	11	40x40x30	-	-
41002-00007	SPRAY NV24	350	Sprayer	24	Pneumatic	6	Trolley	17 kg	38	34x34x82	18	102x102x215
41002-00008	SPRAY NV50	350	Sprayer	50	Pneumatic	6	Trolley	27 kg	60	47x47x107	12	141x107x205
41002-00009	FOAMJET SV24	351	Foam sprayer	24	Air operating	6	Trolley	17 kg	38	34x34x82	18	102x102x215
41002-00011	FOAMJET SX24	351	Foam sprayer	24	Air operating	6	Trolley	13 kg	29	34x34x82	18	102x102x215
41002-00010	FOAMJET SV50	351	Foam sprayer	50	Air operating	6	Trolley	27 kg	60	47x47x107	12	141x107x205
41002-00012	FOAMJET SX50	351	Foam sprayer	50	Air operating	6	Trolley	20 kg	44	47x47x107	12	141x107x205

Foam box

FOAM SYSTEM

MORE INFO

STANDARD EQUIPMENT

• 00080-02919	• 8m hose 00014-01114			

OPTIONAL

• 00073-00129 4x5 kg foaming cleanser for commercial vehicles	• 00073-00127 4x5 Kg alkaline foaming cleanser for food industry	• 00073-00128 4x5 Kg foaming cleanser for hygiene facilities	• 00073-00126 4x5 kg foaming cleanser for cloth and carpets	

CHARACTERISTICS

- Device for dense foam production and spreading. Easy to install, it requires only compressed air connection and power supply.
- Ideal for cleaning: car body, car interiors, bathrooms, kitchens, slaughterhouses, food processing areas, health care settings, cellars.

TECHNICAL DATA

	Foam box
code	10001-10260
voltage	220-240V ~ 50Hz
pumps no. - power	2 - 100W
air pressure	4 bar
delivery rate	1 l/m
detergent concentration	4%
dimension/weight	44 x 13 h 25/3 Kg

Spray

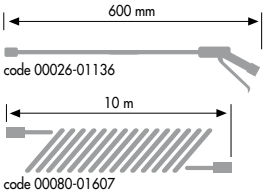

Spray 24

Spray 50

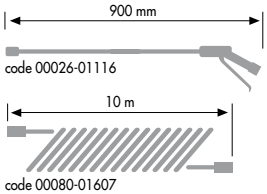

MORE INFO

STANDARD EQUIPMENT

• Professional gun.	• Lance with nozzle.	• Integrated inlet and outlet quick.	• Chemical use hose and gasket.	

OPTIONAL

• 00073-00129 4x5 kg foaming cleanser for commercial vehicles	• 00073-00127 4x5 Kg alkaline foaming cleanser for food industry	• 00073-00128 4x5 Kg foaming cleanser for hygiene facilities	• 00073-00126 4x5 kg foaming cleanser for cloth and carpets	

CHARACTERISTICS

• **Spray:** Pneumatic charge sprayers need to be connected to an air compressor to charge the tank and allow the product vaporization without the connection to the air compressor. They work at high-pressures and so they use capacious steel or stainless steel tanks to allow a greater working autonomy.

TECHNICAL DATA

	Spray NV24	Spray NV50
code	41002-00007	41002-00008
capacity/model	24 l/painted	50 l/painted
working pressure	6 bar	6 bar
safety valve	max 8 bar	max 8 bar
pressure indicator	pressure gauge	pressure gauge
level indicator	external column	external column
recharging	pneumatic	pneumatic
pressure regulator	manual	manual
gun connection	1/4" G-F	1/4" G-F
hose type	rilsan	rilsan
hose/lance lenght	10 mt/600 mm	10 mt/900 mm
dimension/weight	28x32x75 cm/15 kg - 33,06 lbs	45x42x100 cm/25 kg - 55,11 lbs

Foamjet

Foamjet 24

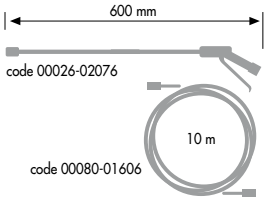

Foamjet 50

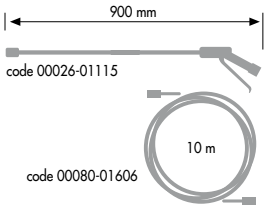

FOAM SYSTEM

MORE INFO

STANDARD EQUIPMENT

• Professional gun.	• Lance with nozzle.	• Integrated inlet and outlet quick.	• Chemical use hose and gasket.	

CHARACTERISTICS

• Continuous pneumatic foam sprayers need a permanent connection to an air compressor; in this way air mixes with the chemical product producing a soft and voluminous foam that persists on surfaces: with a little chemical product, it is possible to treat wider areas or tough dirt (also on ceilings, inclined and/or slippery walls). • They work at high-pressure and so they use capacious steel or stainless steel tanks to allow a greater working autonomy.

TECHNICAL DATA

	Foamjet SV24	Foamjet SX24	Foamjet SV50	Foamjet SX50
code	41002-00009	41002-00011	41002-00010	41002-00012
capacity/model	24 l/painted	24 l/Stainless steel	50 l/painted	50 l/Stainless steel
working pressure	6 bar	6 bar	6 bar	6 bar
safety valve	max 8 bar	max 8 bar	max 8 bar	max 8 bar
pressure indicator	pressure gauge	pressure gauge	pressure gauge	pressure gauge
level indicator	external column	external column	external column	external column
recharging	air operating	air operating	air operating	air operating
pressure regulator	manual	manual	manual	manual
gun connection	1/4" G-F	1/4" G-F	1/4" G-F	1/4" G-F
hose type	rilsan	rilsan	rilsan	rilsan
hose/lance lenght	10 mt/600 mm	10 mt/600 mm	10 mt/900 mm	10 mt/900 mm
dimension/weight	28x32x75 cm/15 kg - 33,06 lbs	28x32x75 cm/11 kg - 24,25 lbs	45x42x100 cm/25 kg - 55,11 lbs	45x42x102 cm/18 kg - 39,68 lbs

Technology

T1 manual cleaning | T2 sprayer and Wheelbarrows | T3 carpet cleaner | T4 high-pressure cleaner | T5 steam cleaner | T6 single disc machine | T7 floor scrubber-drier

Fields

S1 vehicles | S2 mechanical industry | S3 food industry | S4 building

MODEL	DESCRIPTION	FIELDS	PROPERTIES	USE:
LC-110L code 00073-00135 	UNSCENTED HACCP FLOOR CLEANER	S1 S3 S4	High degreasing power. Suitable for deep cleaning floors and hard surfaces in kitchens, food service areas, meat processing plants, oil mills, and food processing plants in general.	Dilute 10-30 grams of product per liter of water, apply with a cloth or floor cleaner, then rinse thoroughly. Recommended for HACCP-controlled areas.
Ph 7.8 - 8.2 1,000 g/ml	5000 ml x 4 pz.		T1 T2 T3 T5 T7	

MODEL	DESCRIPTION	FIELDS	PROPERTIES	USE:
LCN-800 code 00073-00097 	FRAGRANCE SANITISING DETERGENT	S1 S3 S4	Destroys unpleasant odours, fights the proliferation of bacteria, harmful micro-organisms, fungi and moulds. Contains quaternary ammonium salts. Leaves a fresh and long-lasting fragrance in the enviroment.	On all types of hard surface, dilute from 1 to 3%. In the case of tenacious contaminations and aggressive unpleasant odours, dilute up to 6%.
Ph 7.8 - 8.2 1,000 g/ml	5000 ml x 4 pz.		T1 T2 T3 T5 T7	

MODEL	DESCRIPTION	FIELDS	PROPERTIES	USE:
LCN-680AL code 00073-00098 	ALCOHOLIC MAINTENANCE DETERGENT	S4	Quick-drying universal neutral detergent. Anti-dust effect for 4-5 days. Leaves a pleasant fragrance in the environment. Does not leave residues.	On all types of washable shiny or hard surface such as glass, stone or ceramic, dilute with water from 0.5% to 1 %.
Ph 6,6 - 7,0 1,000 g/ml	5000 ml x 4 pz.		T1 T3 T5 T7	

MODEL	DESCRIPTION	FIELDS	PROPERTIES	USE:
LCN-640WM code 00073-00100 	NON STRATIFYING WAX WASH DETERGENT	S4	Cleans and shines surfaces. Regenerates protective and wax treatments. Non filmogenous and leaves a pleasant fragrance in the environment.	On all types of washable hard surfaces, including floors protected by wax and/or sealants, dilute in water to 0.5%-1%.
Ph 8,8 - 9,2 1,000 g/ml	5000 ml x 4 pz.		T1 T2 T3 T5 T7	

Technology

T1 manual cleaning | T2 sprayer and Wheelbarrows | T3 carpet cleaner | T4 high-pressure cleaner | T5 steam cleaner | T6 single disc machine | T7 floor scrubber-drier

Fields

S1 vehicles | S2 mechanical industry | S3 food industry | S4 building

MODEL	DESCRIPTION	FIELDS	PROPERTIES	USE:
LCB-740F code 00073-00104 	ALKALINE MULTIPURPOSE DETERGENT	S1 S2 S3 S4	Dissolves and detaches organic and inorganic dirt.	On all types of hard washable surfaces, ceramic or enamelled surfaces, windows and doors, equipment and industrial machine tools. Dilute in water from 1% to 2%.
Ph (sol. 1%) 6.9 - 7.9 1,000 g/ml	5000 ml x 4 pz.		T1 T2 T4 T7	

MODEL	DESCRIPTION	FIELDS	PROPERTIES	USE:
LCN-600SVF code 00073-00105 	SOLVENT DETERGENT OF VEGETABLE ORIGIN	S1 S2 S3 S4	Eliminates tar, rubber, glue and adhesive residues. Removes even stratified (acrylic or polymer) wax films. Disintegrates persistent dirt of animal or mineral origin.	According to the degree of dirt and thickness of the film, dilute in water from 0.5% to 2%.
Ph 5,8 - 6,2 0,950 g/ml	5000 ml x 4 pz.		T1 T2 T5 T6 T7	

MODEL	DESCRIPTION	FIELDS	PROPERTIES	USE:
LC 113 GV code 00073-00138 	CARPET AND TEXTILE WASH DETERGENT	S1	Removes dirt, regenerates and protects fibres. Does not leave residues and releases a pleasant fragrance.	Dilute in water from 2% to 5%.
Ph 6.8 - 7.2 1,010 g/ml	5000 ml x 4 pz.		T3 T5	

FOAM SYSTEM

Technology

T2 sprayer | T3 carpet cleaner | T4 high-pressure cleaner | T5 steam cleaner

Fields

S1 vehicles | S3 food industry

CHEMICAL PRODUCTS FOR DENSE FOAM PRODUCTION

LC 104F

S1 T2 T3 T4 T5

00073-00129 4x5 kg

Note

GENERAL TERMS OF SALE Goods travel at buyer's risk.
Images and technical specifications of products and accessories
are not binding and can be modified without notice.

Follow us on

PART OF COMETGROUP

Lavorwash S.p.A. J.F.Kennedy, 12 - 46020 Pegognaga (MN) Italy
Tel. +39 0376 55431 | info@lavor.com | www.lavor.com

0079-02261-0 11-2025